Frontiers of Information Technology & Electronic Engineering
www.jzus.zju.edu.cn; engineering.cae.cn; www.springerlink.com
ISSN 2095-9184 (print); ISSN 2095-9230 (online)
E-mail: jzus@zju.edu.cn

# Data plane: a unified data collection framework

Yannan YUAN[†‡], Fei QIN, Jiankang LIU, Yuanyuan WANG, Jianan CAI, Xiang PAN, Dajie JIANG

*Vivo Mobile Communication Co., Ltd., China*

[†]E-mail: yannan.yuan@vivo.com

Received Apr. 1, 2024; Revision accepted Dec. 1, 2024; Crosschecked

**Abstract:** 5G offers different data collection methods for different use cases, some of which have faced challenges due to a lack of data providers. The fragmented solutions for individual use cases have high standard overheads and can result in duplicate data collection. Moreover, existing data collection methods are not suitable for collecting the large amounts of data required by 6G new capabilities, such as native AI and sensing. Therefore, in this paper we propose a unified data collection framework based on a 6G data plane (DP). Through the protocol stack of the DP and a two-sided data collection mode, the proposed unified data collection framework is more suitable for collecting large amounts of data. The gain of DP in uplink (UL) processing delay was validated by test results based on a 6G user equipment (UE) prototype. As the data packet length increases, the advantage of the DP protocol stack on the UE UL processing delay becomes more significant. By way of rewards or data exchange, the proposed two-sided data collection mode increases the willingness of data providers to provide data. The two-sided data collection mode enables the possibility of digital twin (DT) UEs. DT UEs can reuse a large number of UEs in the physical network to reduce the infrastructure resource overhead incurred by the DT network and improve performance. Therefore, the unified data collection framework provides extensive data functionalities to realize the full potential of the 6G system.

**Key words:** 6G unified data collection framework; Data plane; Protocol stack; Two-sided data collection mode; Digital twin network

https://doi.org/10.1631/FITEE.2400247 **CLC number:**

Unedited

## 1 Introduction of 5G data collection

The 5G standards provide various data collection methods to meet the needs of different use cases (Fig. 1). Based on the definitions of physical layer measurements[1], layer 2 (L2) measurements[2] and performance measurements[3], to support experience optimization, radio resource management and network operation and maintenance (OAM), data collection solutions for Quality of Experience (QoE)[4], Minimization of Drive Tests (MDT)[5], and Self-Optimizing Networks (SON)[6] are independently standardized. [9] and [10] designed positioning protocols for the location management function (LMF). The LMF, base station and OAM collect data from UEs independently, resulting in duplicate data collection, such as channel status information reference signal received power (CSI-RSRP). In [7], the Data Collection Coordination Function (DCCF) is introduced to support the data collection and exposure of analytics results for the network data analytics function (NWDAF) in the 5G core network (CN). The network exposure function (NEF) in [8] can collect data from network functions (NFs) of the 5G CN via a service-based interface and provide data to application functions (AFs) via northbound APIs. The DCCF and NEF can collect duplicate data from NFs.

‡ Corresponding author
ORCID: Yannan YUAN, https://orcid.org/0000-0003-1892-612X
© Zhejiang University Press 2024

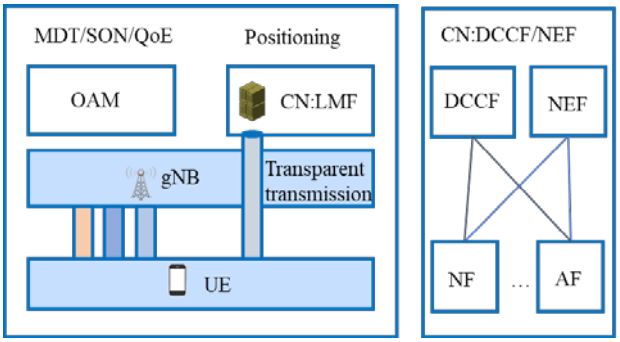


**Fig. 1 Data collection methods of 5G**

From the perspective of the CN, we take the DCCF as an example. The NWDAF can collect data from the CN NFs and AFs via the DCCF, but not from the UE or radio access network (RAN). The analytics results of the NWDAF can be delivered to NFs by the DCCF. Since the DCCF is an optional feature introduced in a later release, the NWDAF can also directly collect data based on data subscription from the access and mobility management function (AMF), session management function (SMF), policy control function (PCF), unified data management (UDM), OAM, etc. The DCCF in the 5G CN has an embryonic form of a unified data collection framework to collect data from different NFs. However, NFs other than NWDAF are unable to collect data or provide data through the DCCF. Neither UE nor RAN can collect data through the DCCF.

From the perspective of the RAN, we take QoE, MDT and SON as examples. Although both QoE and signaling-based MDT are initiated by OAM, OAM generates only the QoE configurations of UEs. The UE QoE configurations are transparent to the RAN node. The configuration of MDT sent to UEs is generated by the RAN node. Finally, the RAN node sends the collected data to the trace collection entity/ measurement collection entity (TCE/MCE). Based on the data analysis of TCE/MCE, the configuration of RAN nodes can be optimized through SON. Since the QoE and MDT data are carried by radio resource control (RRC) signaling of control plane (CP), the granularity of the data collected by existing methods is not fine enough. For example, the time interval for data collection is typically 15 min and the data collected are at cell-level rather than UE-level. This is because the CP is designed for small size, high priority signaling rather than bulk data collection.

In addition to the data collection requirements for communication optimization, there are new data collection requirements arising from 6G. [11] proposed six usage scenarios: immersive communication, massive communication, hyper reliable and low-latency communication, artificial intelligence (AI) and communication, integrated sensing and communication (ISAC), and ubiquitous connectivity. [12] emphasized the importance of native AI and native security in the design of 6G network architecture. It is foreseeable that sensing data (e.g., sensing measurement data) and AI data (e.g., AI model) will be two new types of data of the 6G system. The collection of these two types of data is characterized by a large data volume and flexible termination node (e.g., UEs, RAN nodes, CN NFs). In addition, the digital twin (DT) network approach in [13] can realize a high level of autonomy for a 6G wireless network. The key element of the DT network is real-time data collection.

In summary, data collection is a pervasive requirement of the 6G system. However, 5G data collection methods have issues with fragmented solutions for individual use cases, leading to high standardization overheads and UE/NF duplicate data collection. The data collection methods based on the CP are not suitable for collecting large amounts of data, such as those needed by 6G native AI, ISAC, and DT networks. Data collection methods based on the CP also suffer from low efficiency of data transmission. Moreover, 5G data collection methods adopt mainly one-sided data collection mode which results in a lack of data providers.

To solve the above problems, we propose a unified data collection framework. In this paper, Section 2 describes the architecture of the 6G data plane (DP) as a unified data collection framework to solve the problem of duplicate data collection and reduce the standardization overhead. Section 3 describes the protocol stack of

Unedited

the DP, which supports large amounts of data collection. To improve efficiency, a DT network solution based on a two-sided data collection mode provided by the unified data collection framework is described in Section 4. Section 5 summarizes the paper.

## 2 Architecture of the 6G DP

We propose using the DP to provide a unified data collection framework for the 6G system. The logical functions of the 6G DP include a data control function, data privacy and security management function, data storage function, data transmission function, data processing function, data provider and data consumer (Fig. 2). The details are as follows:

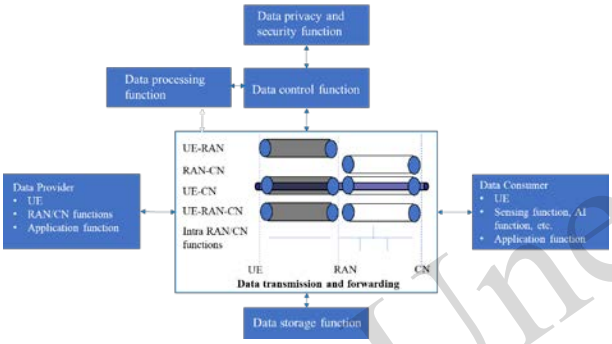


**Fig. 2 The logical architecture of the 6G DP**

**Data Control Function (DCF):** The DCF is used to support data collection coordination and to configure data service, data transmission (e.g., establishing, modifying, releasing the bearer of the DP), and data processing.

**Data Privacy and Security Function (DPSF):** The DPSF is used to support the mechanisms of privacy and security, such as authentication, authorization, and access control.

**Data Repository Function (DRF):** The DRF is used to support the long term storage and retrieval of data collected by the DP.

**Data Transmission Function (DTF):** The DTF is used to support the transmission and forwarding of DP data based on the configuration from the DCF. Depending on the termination node of data transmission, DP transmission can use several data transmission protocols, such as the protocols between UE and RAN, RAN and CN, UE and CN, as well as the protocol of intra RAN or intra CN functions.

**Data Processing Function (DProcF):** The DProcF is an optional function, which is used to pre-process data or provide data analysis according to the requirements of data service.

**Data Provider (DPro):** The DPro provides the required data according to the configuration from the DCF.

**Data Consumer (DCons):** The DCons sends data requests and receives data responses.

Unedited

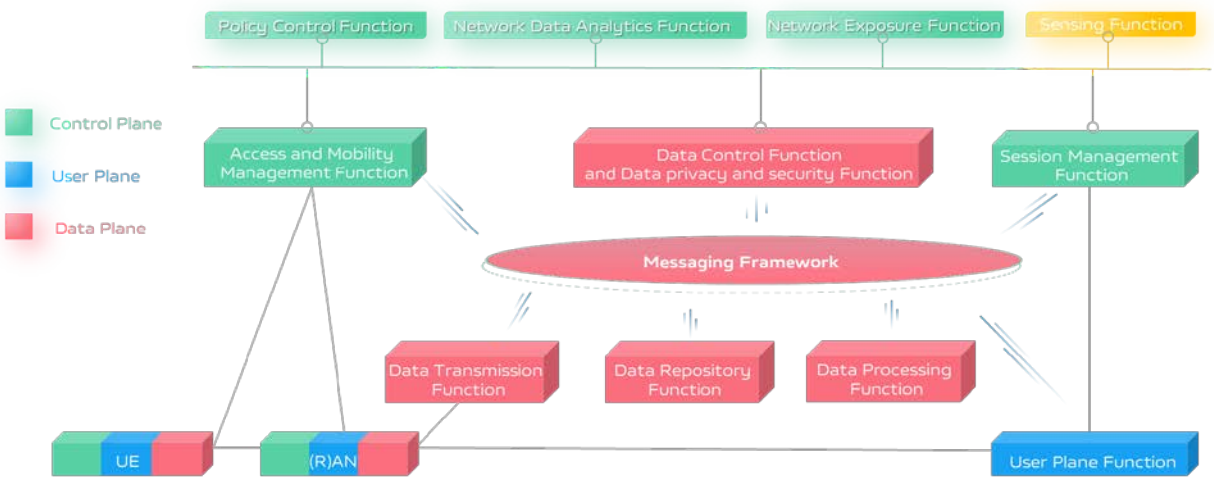


**Fig. 3 6G system architecture with DP**

Based on the 5G architecture[14], we propose a 6G system architecture that introduces the sensing function and the aforementioned data functions (Fig. 3). For the communication functions in the green and blue blocks, we have assumed the adoption of current 5G standards without considering the further enhancement that will be brought by 6G. The existing service-based interfaces are used mainly among the CP functions of the CN. The service-based interface uses the HTTP/2 protocol with JavaScript Object Notation (JSON) as the serialization protocol[15]. Since JSON is more suitable for signaling, we propose to enhance the existing protocols of the service-based interface or build a messaging framework to support the transmission of large amounts of data within the CN to improve efficiency. Correspondingly, the RAN and UEs also need to introduce peer-to-peer data functions, etc., to support the new features of 6G. The RAN and UEs also need to introduce peer-to-peer functions to support the enhancements of communication and new features of 6G.

## 3 Protocol stack of the 6G DP

Oriented to different transmitters and receivers, the protocols of the DP include UE, RAN and CN protocols, such as those between UE and RAN, RAN and CN, UE and CN, functions of RAN and functions of CN. The design of the protocol stack of the DP is the key factor that determines its efficiency, especially the stack between UE and RAN. If the protocol of the DP is called the data service application protocol (DSAP), we propose a DP protocol stack of the air interface between the UE and RAN (Fig. 4).

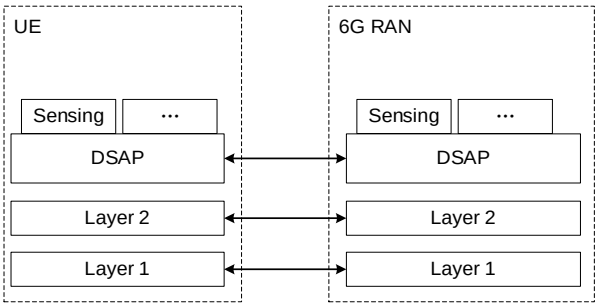


**Fig. 4 A DP protocol stack of the air interface**

### 3.1 DP protocol stack of the air interface

The DSAP includes the DCF, DPSF, DRF, DTF and DProcF. Based on the requirements of data collection, the DSAP establishes appropriate DP radio bearers (DPRB) through RRC. If the collected data are visible to the RAN node, the type of DPRB is a bearer terminated at the RAN node. If the collected data are invisible to the RAN node, the type of DPRB is a bearer transparently transmitted by the RAN node. There is also a type of DPRB in which the data carried are processed by the RAN node before being forwarded to the next appropriate node. The DPRB has the characteristics of flexible priority. The priority of the DPRB can be set according to the data volume, quality of data transmission, and traffic load of the user plane (UP). Therefore, compared to the signaling radio bearer with the highest priority, the DPRB is more suitable for collecting large amounts of data. Additionally, the DPRB can meet the requirements of flexible data termination nodes and on-demand processing.

Next, we describe how the air interface DP protocol stack can achieve efficient data transmission from the perspectives of the DSAP, L2, and layer 1(L1). The DProcF in the DSAP of data providers supports data compression, including both lossy algorithms and lossless algorithms. The volume of data can be reduced by data compression. When the collected data are ready for transmission, data are not subjected to Abstract Syntax Notation One (ASN.1) processing in the DSAP. ASN.1 is used in RRC to express the complex data structures of signaling and to serialize data into bit streams. The pure data provided by data providers do not have a complex structure and so the data representation or serialization can be optional or optimized. L2 of the DP protocol stack uses simplified protocol functions. For example, unified data storage can reduce the overhead of L2 headers and data copying, and encryption/decryption, segmentation/re-segmentation can be configured on demand. Finally, L1 of the DP protocol stack can adopt more efficient technologies of the physical layer, such as joint source-channel coding[16] or semantic communication[17][18], to improve the spectral efficiency of data collection.

### 3.2 Test and performance analysis

The efficiency of the DP protocol stack between the UE and RAN was verified via a 6G UE prototype developed by vivo, the parameters of which are shown in Table 1. The test case is that the UE collects data and sends the collected data to the network according to the configuration.

Unedited

**Table 1 Parameters of the UE prototype**

| Parameters | Number of frames |
|---|---|
| CPU（@frequency） | Arm A53（@1 GHz） |
| Memory | 4G |
| ASN.1 tool/version | Objective/V773 |
| ProtoBuf tool/version | protoc 3.6.1 |
| Encryption algorithm | AES128 |

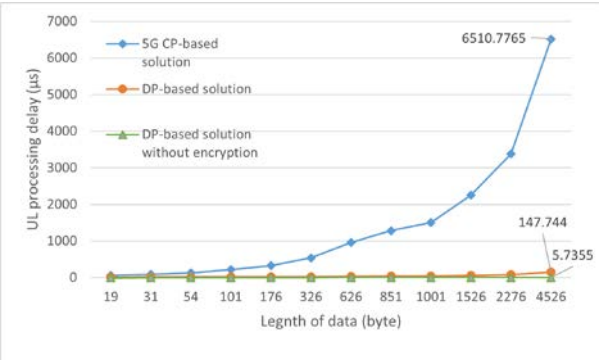


**Fig. 5 The average UL processing delay of data collection based on the DP and CP**

The uplink (UL) processing delay was tested under diverse data values, data length, and user data loads. The test results (Fig. 5) show that the proposed unified data collection framework based on the DP is more suitable for collecting large amounts of data. The average UL processing delay does not include the physical layer because the physical layers of the existing collection method based on the CP and those of the DP protocol stack are the same. Analyzed from the UE side, the average UL processing delay of the CP-based solution was 63.209 us when the length of data was 19 bytes. With the same length of data, the average UL processing delay of the DP was 13.7305 us, which is about 22% of the processing delay of the existing CP-based solution. When the encryption was disabled via the network configuration, the average UL processing delay of the DP-based solution was 3.921 us. As the length of data increases, the efficiency improvement of the proposed DP protocol stack increases.

The processing delay of ASN.1 and ProtoBuf was also tested to evaluate potential optimized methods of data representation and serialization. In the minimum value test case, the output data length of proto3 gradually decreased from 127% to 77% of ASN.1 as the data length increased. The processing delay of proto3 was shorter than that of ASN.1 for both the maximum and minimum test cases. In particular, the encoding time of proto3 was about 10% of that of ASN.1, and the decoding time about 17% of that of ASN.1. As the data length increases, the processing delay advantage of ProtoBuf becomes more obvious. ASN.1 is therefore more suitable for short messages with smaller amounts of data. When large amounts of data are collected and transmitted, ProtoBuf performs similarly to ASN.1 in terms of output data length but has a shorter processing delay than ASN.1.

## 4 Two-sided data collection mode enables data applications of 6G

### 4.1 Two-sided data collection mode

The unified data collection framework supports both one-sided and two-sided data collection modes. The one-sided data collection mode refers to the process where only one party obtains the required data during data collection. For example, the existing data collection methods are used by network nodes to obtain the required data, which leads to a low willingness of data providers (such as UEs) to contribute data. The two-sided data collection mode we propose means that both data collection nodes and data providers obtain the required data or rewards. Potential rewards include the number of times to obtain network data, quality of service (QoS) guarantee and priority promotion, data quota, minutes of voice, etc. When data providers can also obtain the required data or rewards, the number of data providers increases. The two-sided data collection mode can improve the success rate of data collection and enable data applications of 6G, such as sensing, AI, and DT network.

Taking the data collection between RAN and UE as an example, RAN initiates a data request with the indication of the data collection mode. For the two-sided mode, the data request can also indicate the data that the UE can obtain during the data collection. Potential data obtained by UE can be UL measurements collected by the network during the data collection process, such as reference signal received power (RSRP), resource block utilization rate, etc. Potential data can also include paging failure data of UE already collected by the network, such as the time of paging failure, the tracking area and cell identifier involved in the paging failure. Since the data provided

Unedited

by the network are helpful for the UE to detect problems and fine-tune local parameters (e.g., policy parameters, AI model parameters), the UE prefers to provide user consent or to accept the data request with the indication of the two-sided data collection mode. Meanwhile, two traditional one-sided data collection procedures are required to accomplish the above two-sided data collection. Therefore, in addition to improving the success rate of the data request, the two-sided data collection mode saves nearly 50% of the signaling message overhead and uses only one DPRB.

In addition, existing network-initiated data collection prevents data providers from sharing data in an active manner. Whether it is the network node or the UE, the existing data collection methods can lead to data wastage due to factors such as storage space. Thus, the two-sided data collection mode also provides a data sharing procedure initiated by the data provider. The data provider releases the information about the shared data and the expected rewards. Therefore, the number of data collections or the volume of data collected is expected to become a new billing parameter. Data services will offer new revenue growth for operators. Since the potential data consumers that each UE can communicate with directly are limited, the network can assist UEs to share data by releasing the information of shared data or by storing shared data.

### 4.2 A DT network solution enabled by the two-sided data collection mode

A DT network is one of the potential data applications of 6G. A DT network can obtain a large amount of real-time status data from the physical network through the DP. In addition, high-precision algorithms (e.g., environment modeling algorithms) are crucial to achieve good performance in terms of similarity and prediction accuracy. However, the DT of complex channel environments and large-scale networks requires substantial computational resources. This creates a dilemma for DT solutions. To achieve a trade-off between resource overhead and performance, we propose a DT network solution that aims to reuse the physical network infrastructure as much as possible.

The service management and orchestration (SMO) is responsible for managing functions of a DT network based on the template of a DT network (Fig. 6). We assume that CN functions and some RAN functions (e.g., a central unit of base station) are deployed on the cloud platform. Through the orchestration function of SMO, it is possible to reuse part of the infrastructure of the physical network to create instances of DT CN functions and instances of DT RAN nodes. The potential reusable infrastructure resources include hot backup nodes and surplus resources based on the tidal effect of network traffic.

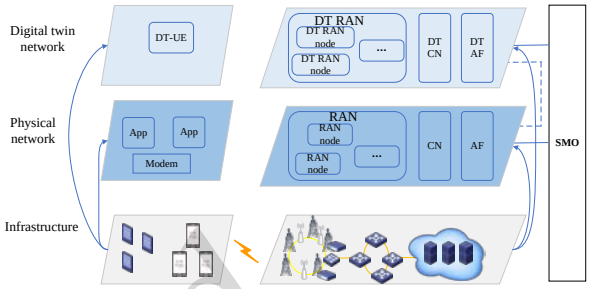


**Fig. 6 A digital twin network solution reusing the infrastructure of the physical network**

For the challenges posed by a large number of UEs and complex channel environments, the two-sided data collection model enables the possibility of DT UEs. According to the data or rewards provided by the network, the UE can provide user consent and accept the request of a DT based on the usage habits of the UE. For example, when the UE is charging during the early morning hours, users can authorize the network to use their UEs as DT UEs. Based on the registration information of the DT UEs, the network selects suitable UEs and configures DT UEs on the physical UEs. This creates an end-to-end DT network based on the cloud-based network infrastructure and UEs.

By frequency or time division multiplexing of spectrum resources, DT UEs can achieve a DT for a large number of UEs and complex channel environments. Data of DT UEs can be collected to train AI models of DT networks. Configurations of DT UEs and the collected data can also be used to pre-verify the performance of the network optimization configuration. Moreover, DT UEs can provide high performance of DTs compared to simulation UEs and simulation channels. Furthermore, in future we will pay more attention to the security of the privacy of DT UEs. Basically, the isolation between DT UEs and physical UEs supports the decoupling of DT UEs and UEs in aspects such as the UE identifier, location

Unedited

information, and context information.

## 5 Conclusions

We propose that 6G provides a unified data collection framework through a DP to meet the ubiquitous data collection requirements. The DP protocol stack consists of a DSAP, simplified L2 and optimized L1. The reduction in processing delay by the DP in UL was validated by test results based on a 6G UE prototype. Moreover, the efficiency improvement of the DP protocol stack increases as the data length increases. For data representation and serialization methods, ASN.1 and Probobuf are suitable for small and large amounts of data respectively. The proposed two-sided data collection mode increases the willingness of data providers to provide data, enabling the possibility of DT UEs. DT UEs can reuse a large number of UEs in the physical network to reduce the infrastructure resource overhead of the DT network. However, some of the rewards (e.g., data or voice quotas) in the two-sided data collection mode may involve billing systems and business models that need to be further validated and refined in commercial networks. We will continue to simulate and analyze the performance of joint source-channel coding and semantic communication for 6G data collection. The DP-based unified data collection framework provides pervasive data functionalities to realize the full potential of the 6G system. Therefore, it is expected to become an important part of 6G system architecture, providing the data foundation for sensing, AI and DT networks.

### Contributors

Yannan Yuan and Fei Qin designed the research. Jiankang Liu, Yuanyuan Wang and Jianan Cai developed a prototype of 6G UE and finished the test of the proposed protocol stack. Yannan Yuan drafted the manuscript. Xiang Pan helped organize 5G standard status. Yannan Yuan and Dajie Jiang revised and finalized the paper.

### Compliance with ethics guidelines

Yannan Yuan, Fei Qin, Jiankang Liu, Yuanyuan Wang, Jianan Cai, Xiang Pan and Dajie Jiang declare that they have no conflict of interest.

### References

[1]. 3GPP Technical Specification Group Radio Access Network, 2024. NR; Physical Layer Measurements, Release 18, Document 3GPP TS 38.215.

[2]. 3GPP Technical Specification Group Radio Access Network, 2023c. NR, Layer 2 Measurements, Release 17, Document 3GPP TS 38.314.

[3]. 3GPP Technical Specification Group Services and System Aspects, 2022. Management and Orchestration, 5G Performance Measurements, Release 17, Document 3GPP TS 28.552.

[4]. 3GPP Technical Specification Group Radio Access Network, 2021. Study on NR QoE (Quality of Experience) Management and Optimizations for Diverse Services, Release 17, Document 3GPP TR 38.890.

[5]. 3GPP Technical Specification Group Radio Access Network, 2023d. Radio Measurement Collection for Minimization of Drive Tests (MDT); Overall Description, Stage2, Release 18, Document 3GPP TS 37.320.

[6]. 3GPP Technical Specification Group Radio Access Network, 2019. Study on RAN-Centric Data Collection and Utilization for LTE and NR, Release 16, Document 3GPP TR 37.816.

[7]. 3GPP Technical Specification Group Services and System Aspects, 2023a. Architecture Enhancements for 5G System (5GS) to Support Network Data Analytics Services, Release 18, Document 3GPP TS 23.288.

[8]. 3GPP Technical Specification Group Core Network and Terminals, 2023a. 5G System, Network Exposure Function Northbound APIs, Stage 3, Release 18, Document 3GPP TS 29.522.

[9]. 3GPP Technical Specification Group Radio Access Network, 2023b. NG-RAN, NR Positioning Protocol A (NRPPa), Release 18, Document 3GPP TS 38.455.

[10]. 3GPP Technical Specification Group Radio Access Network, 2023a. LTE Positioning Protocol (LPP), Release 17, Document 3GPP TS 37.355.

[11]. ITU-R, 2023. M.2160: Framework and Overall Objectives of the Future Development of IMT for 2030 and Beyond.

[12]. Liu GY, Huang YH, Li N, et al., 2020. Vision, requirements and network architecture of 6G mobile network beyond 2030. China Commun, 17(9):92-104. https://doi.org/10.23919/JCC.2020.09.008.

[13]. Deng J, Yue LX, Yang HW, et al., 2023. A digital twin network approach for 6G wireless network autonomy. Proc IEEE Int Conf on Communications Workshops, p.415-420. https://doi.org/10.1109/ICCWorkshops57953.2023.10283539

[14]. 3GPP Technical Specification Group Services and System Aspects, 2023b. System Architecture for the 5G System (5GS), Stage 2, Release 18, Document 3GPP TS 23.501.

[15]. 3GPP Technical Specification Group Core Network and Terminals, 2023b. 5G System; Technical Realization of Service Based Architecture, Stage 3, Release 18, Document 3GPP TS 29.500.

[16]. Xu JL, Ai B, Wang N, et al., 2023. Deep joint

Unedited

source-channel coding for CSI feedback: an end-to-end approach. IEEE J Sel Areas Commun, 41(1):260-273. https://doi.org/10.1109/JSAC.2022.3221963.

[17]. Zhang P, Xu WJ, Gao H, et al., 2022. Toward wisdom-evolutionary and primitive-concise 6G: a new paradigm of semantic communication networks. Engineering, 8(1):60-73. https://doi.org/10.1016/j.eng.2021.11.003.

[18]. Dai JC, Zhang P, Niu K, et al., 2023. Communication beyond transmitting bits: semantics-guided source and channel coding. IEEE Wirel Commun, 30(4):170-177. https://doi.org/10.1109/MWC.017.2100705.

Unedited