Progressive failure analysis of slope with strain-softening behaviour based on strength reduction method

应变软化边坡渐进破坏分析的强度折减法

Cite this as: Ke Zhang, Ping Cao, Rui Bao, 2013. Progressive failure analysis of slope with strain-softening behaviour based on strength reduction method. *Journal of Zhejiang University-SCIENCE A (Applied Physics & Engineering)*, 14(2):101-109. [doi:10.1631/jzus.A1200121]

JZUSA

Main goal

Based on the strength reduction method and strain-softening model, a method for progressive failure analysis of strain-softening slopes was presented in this paper.

Main method

Strain-softening model, strength reduction method

The mutation of displacement at the slope crest is taken as the critical failure criterion

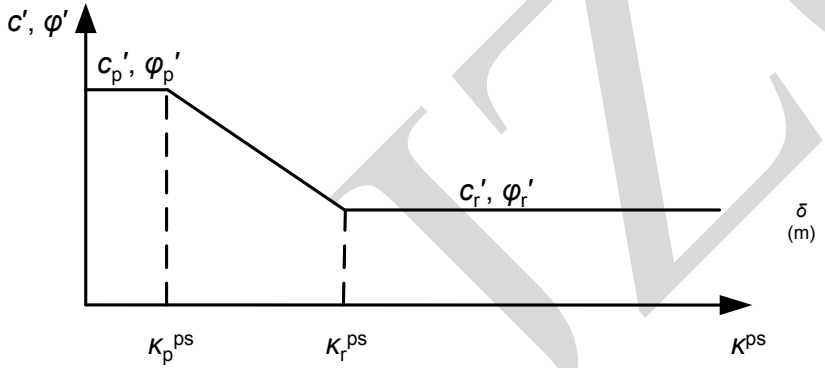

Fig. 1 Strain-softening model

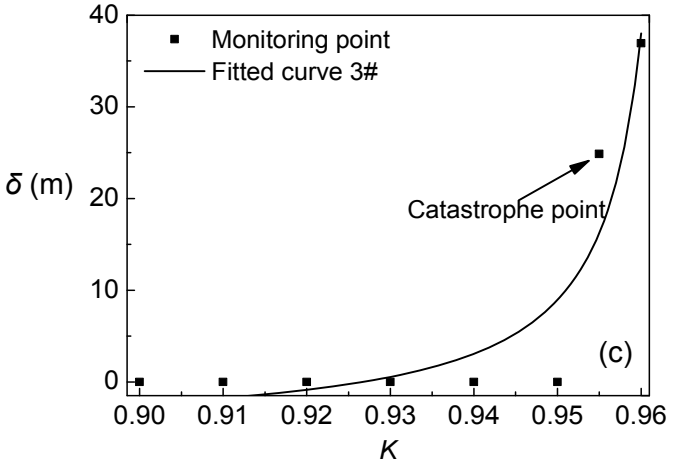

Fig. 4 Relationship between reduction factor and horizontal displacement

(c) Strain-softening strength

JZUSA

κ_r^{ps}

Computational model and results

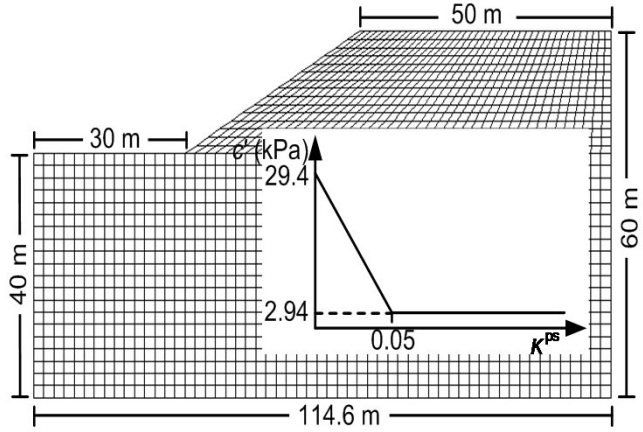

Fig. 3 Calculation model (Zhang and Zhang, 2007)

Table 5 Comparison of results obtained by different methods

Study	Method	Strain-softening strength	Peak strength	Residual strength
Zhang and Zhang, 2007	Sweden	1.014	1.177	0.592
This study	Spencer	/	1.280	0.615
This study	SRM*	0.954	1.259	0.601

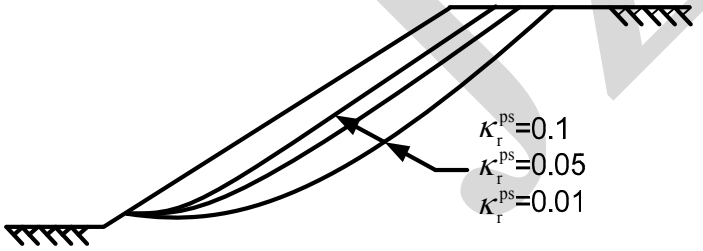

Fig. 7 Relationship between and critical slip surface

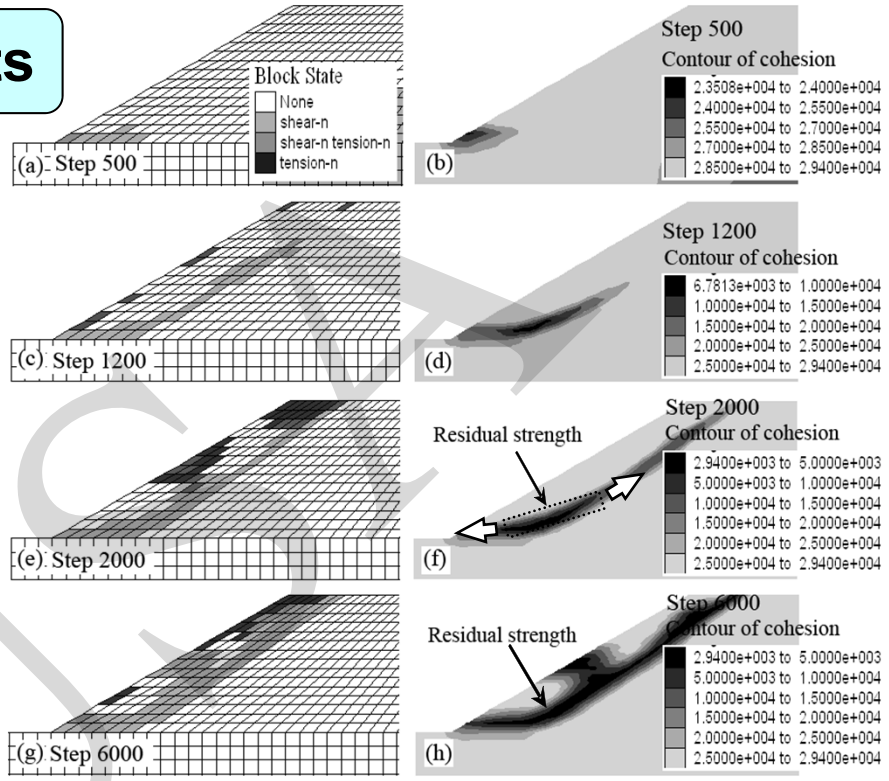

Fig.6 Progressive failure process of the slope

Distribution of failure zone at step 500 (a), step 1200 (c), step 2000 (e) and step 6000 (g); Contour of cohesion at step 500 (b), step 1200 (d), step 2000 (f) and step 6000 (h)

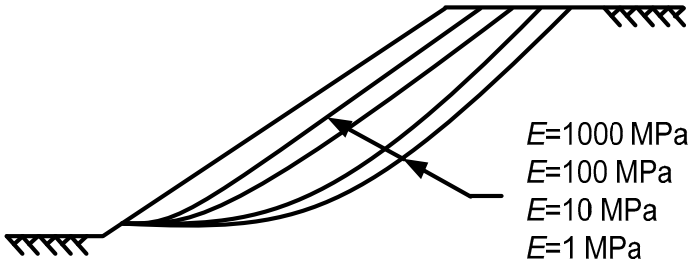

Fig. 8 Relationship between elastic modulus and critical slip surface

IZUSA