Inter-asperity cavitation for misalignment journal lubrication problem based on mass-conservative

基于质量守恒原理的不对中轴颈微凸体空穴分析

Citation: Zhen-peng HE, Jun-hong ZHANG, Zhou-yu LI, Lin BA, Gui-chang ZHANG, Kai-nan WANG, Xing LU, 2013. *Journal of Zhejiang University-SCIENCE A (Applied Physics & Engineering)*, 14(9):642-656. [doi:10.1631/jzus.A1300080]

JZUSA

Inter-asperity cavitation for misalignment journal lubrication problem based on mass-conservative algorithm

Theory and algorithm:

1 Journal misalignment
2 Mass-conservative algorithm
3 Flow factors and surface pattern parameter

Lubrication models:

1 Traditional model without cavitation
2 Cavitation model without surface roughness
3 Inter-asperity cavitation model

The research content of the paper

Model validation for the cavitation model	Pressure distribution comparison
The analysis for the oil leakage difference	Velocity distribution analysis
Lubrication performances comparison	Cavitation zone comparison with different models
The effect of surface roughness on density distribution locates at cavitation zone	The effect of surface pattern parameter on the density distribution

IJUSA

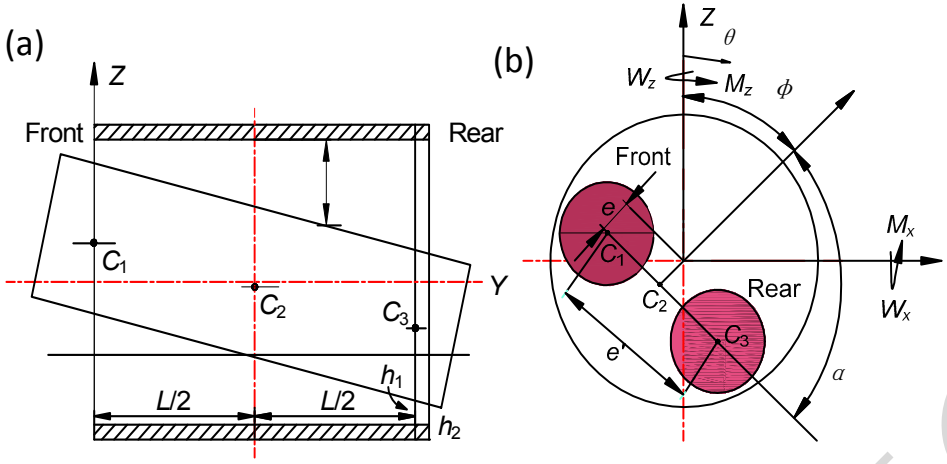

Fig. 1 Misaligned journal bearing system
(a)Frontal gland projection; (b) Axial projection

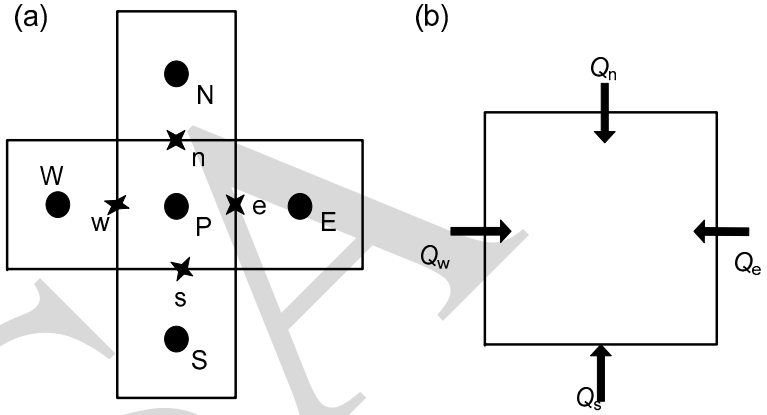

Fig. 2 Control volume and value locations
(a) Control volume, node, interface; (b) Oil flux into control volum

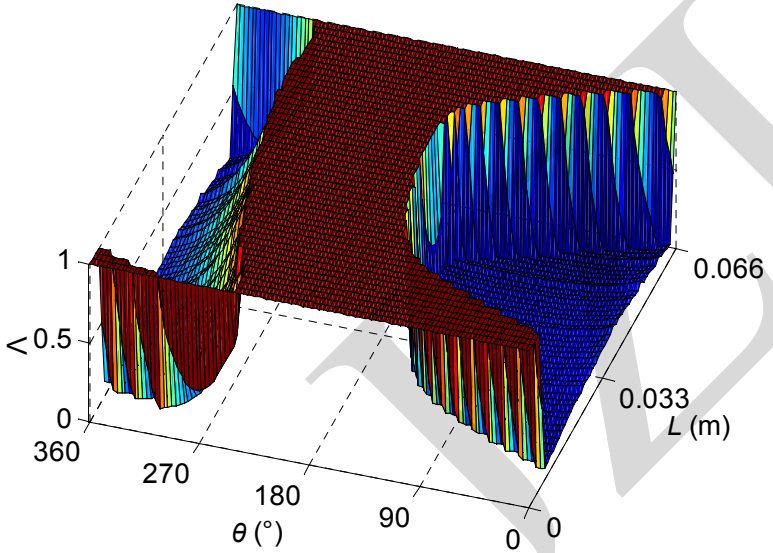

Fig. 3 Density distribution when ε =0.8, ϕ= π/2, α '= π/2,and γ '=0.025 °

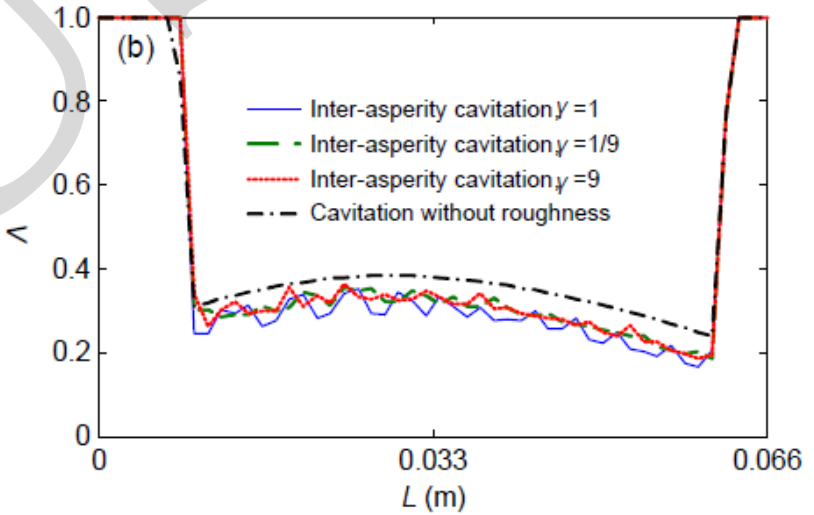

Fig. 4 Effect of surface pattern parameter on density along circumference direction when σ_1=1.5 μm, σ_2=1.5 μm, ε =0.5, and γ '=0.025 °

ASME