Journal of Zhejiang University-SCIENCE A (Applied Physics & Engineering)

Interval multiobjective optimization of structures based on radial basis function, interval analysis and NSGA-II

Key words: Interval multiobjective optimization; Uncertainty; Radial basis function; Interval analysis method; NSGA-II

Cite this as: Jin CHENG, Gui-fang DUAN, Zhen-yu LIU, Xiao-gang LI, Yi-xiong FENG, Xiao-hai CHEN, 2014. Interval multiobjective optimization of structures based on radial basis function, interval analysis and NSGA-II. *Journal of Zhejiang University-SCIENCE A (Applied Physics & Engineering)*, 15(10):774-788. [doi:10.1631/jzus.A1300311]

Interval multiobjective optimization model of a structure

In order to obtain a structure with good comprehensive performance, the following multiobjective interval optimization model including multiple performance indices of a structure in the objective and constraint functions is established

$$\begin{aligned}
&\min_{\boldsymbol{x}}\{f_1(\boldsymbol{x},\boldsymbol{U}),f_2(\boldsymbol{x},\boldsymbol{U}),\cdots,f_{N_o}(\boldsymbol{x},\boldsymbol{U})\}\\
&\text{s.t. } g_j(\boldsymbol{x},\boldsymbol{U})\le B_j=[b_j^L,b_j^R],\ j=1,2,\cdots,N_c;\\
&\quad \boldsymbol{x}_l\le\boldsymbol{x}\le\boldsymbol{x}_r,\ \boldsymbol{x}\in\mathbb{R}^n;\\
&\quad \boldsymbol{U}=[\boldsymbol{u}^L,\boldsymbol{u}^R],U_k=[u_k^L,u_k^R],\ k=1,2,\cdots,N_u.
\end{aligned}$$

where $\boldsymbol{x}$ is the n-dimensional design vector while $\boldsymbol{x}_l$ and $\boldsymbol{x}_r$ are the allowable minimum and maximum vectors of $\boldsymbol{x}$. $\boldsymbol{U}$ is the N_u-dimensional uncertain vector with all its components being interval numbers. The superscripts "L" and "R" denote the left and right bounds of interval respectively. $f_i(\boldsymbol{x},\boldsymbol{U})\ (i=1,2,\cdots,N_o)$ and $g_j(\boldsymbol{x},\boldsymbol{U})\ (j=1,2,\cdots,N_c)$ are the objective and constraint functions, the values of which depend on the design vector $\boldsymbol{x}$ and the uncertain vector $\boldsymbol{U}$. B_j is the given interval constant of the jth constraint, which can also be a deterministic value. N_o, N_c and N_u are the number of objectives, constraints and uncertain parameters respectively.

Transformation of interval optimization model into deterministic one

$$\min_{\boldsymbol{x}}\{f_1(\boldsymbol{x},\boldsymbol{U}),f_2(\boldsymbol{x},\boldsymbol{U}),\cdots,f_{N_o}(\boldsymbol{x},\boldsymbol{U})\}$$

Transformation of interval objective functions by **interval ranking relation**

$$\min_{\boldsymbol{x}}\left\{f_i^M(\boldsymbol{x}),f_i^W(\boldsymbol{x})\right\};$$

$$f_i^M(\boldsymbol{x})=\left(f_i^L(\boldsymbol{x})+f_i^R(\boldsymbol{x})\right)/2;\ f_i^W(\boldsymbol{x})=\left(f_i^R(\boldsymbol{x})-f_i^L(\boldsymbol{x})\right)/2.$$

$$f_i^L(\boldsymbol{x})=\min_{\boldsymbol{U}\in\Gamma}f_i(\boldsymbol{x},\boldsymbol{U});\ f_i^R(\boldsymbol{x})=\max_{\boldsymbol{U}\in\Gamma}f_i(\boldsymbol{x},\boldsymbol{U}).$$

$$g_j(\boldsymbol{x},\boldsymbol{U})\le B_j=[b_j^L,b_j^R]$$

Transformation of interval constraints by **satisfactory degree of interval**

$$P(G_j\le B_j)\ge\lambda_j,\ j=1,2,\cdots,N_c;$$

$$G_j=[g_j^L(\boldsymbol{x}),g_j^R(\boldsymbol{x})].$$

$$g_j^L(\boldsymbol{x})=\min_{\boldsymbol{U}\in\Gamma}g_j(\boldsymbol{x},\boldsymbol{U});\ g_j^R(\boldsymbol{x})=\max_{\boldsymbol{U}\in\Gamma}g_j(\boldsymbol{x},\boldsymbol{U}).$$

Unite the midpoint and width of a performance index into one objective by **weighting method** and handle the constraints by **penalty function method**

$$\min_{\boldsymbol{x}}\left\{f_{p_i}(\boldsymbol{x})\right\},i=1,2,\cdots,N_o.$$

$$f_{p_i}(\boldsymbol{x})=\omega_i\left(f_i^M(\boldsymbol{x})+\alpha_i\right)/\beta_i+(1-\omega_i)f_i^W(\boldsymbol{x})/\gamma+\psi_j\sum_{j=1}^{N_c}\varphi\left(P\left(G_j\le B_j\right)-\lambda_j\right);$$

$$\varphi\left(P\left(G_j\le B_j\right)-\lambda_j\right)=\left(\max\left(0,-\left(P\left(G_j\le B_j\right)-\lambda_j\right)\right)\right)^2.$$

Multiobjective optimization algorithm based on RBF, interval analysis and NSGA-II

$$f_i^L(\boldsymbol{x}) = \min_{\boldsymbol{U}\in\Gamma} f_i(\boldsymbol{x},\boldsymbol{U});\quad f_i^R(\boldsymbol{x}) = \max_{\boldsymbol{U}\in\Gamma} f_i(\boldsymbol{x},\boldsymbol{U});$$
$$g_j^L(\boldsymbol{x}) = \min_{\boldsymbol{U}\in\Gamma} g_j(\boldsymbol{x},\boldsymbol{U});\quad g_j^R(\boldsymbol{x}) = \max_{\boldsymbol{U}\in\Gamma} g_j(\boldsymbol{x},\boldsymbol{U}).$$

Interval analysis

$$f_i^L(\boldsymbol{x}) = f_i(\boldsymbol{x},\boldsymbol{u}^M) - \sum_{k=1}^{N_u} \frac{\partial f_i(\boldsymbol{x},\boldsymbol{u}^M)}{\partial u_k} u_k^W;\ f_i^R(\boldsymbol{x}) = f_i(\boldsymbol{x},\boldsymbol{u}^M) + \sum_{k=1}^{N_u} \frac{\partial f_i(\boldsymbol{x},\boldsymbol{u}^M)}{\partial u_k} u_k^W;$$
$$g_j^L(\boldsymbol{x}) = g_j(\boldsymbol{x},\boldsymbol{u}^M) - \sum_{k=1}^{N_u} \frac{\partial g_j(\boldsymbol{x},\boldsymbol{u}^M)}{\partial u_k} u_k^W;\ g_j^R(\boldsymbol{x}) = g_j(\boldsymbol{x},\boldsymbol{u}^M) + \sum_{k=1}^{N_u} \frac{\partial g_j(\boldsymbol{x},\boldsymbol{u}^M)}{\partial u_k} u_k^W.$$

Description of the algorithm:

Step1. Initialization of the parameters for the optimization algorithm;

Step2. Perform FEAs to acquire enough sample data;

Step3. Develop RBFs for computing the objective and constraint functions;

Step4. Construct the approximate deterministic optimization model by integrating interval ranking relation, satisfactory degree of interval, interval analysis and the RBFs developed in Step 3;

Step5. Find the Pareto-optimal solutions to the approximate deterministic optimization model by NSGA-II.

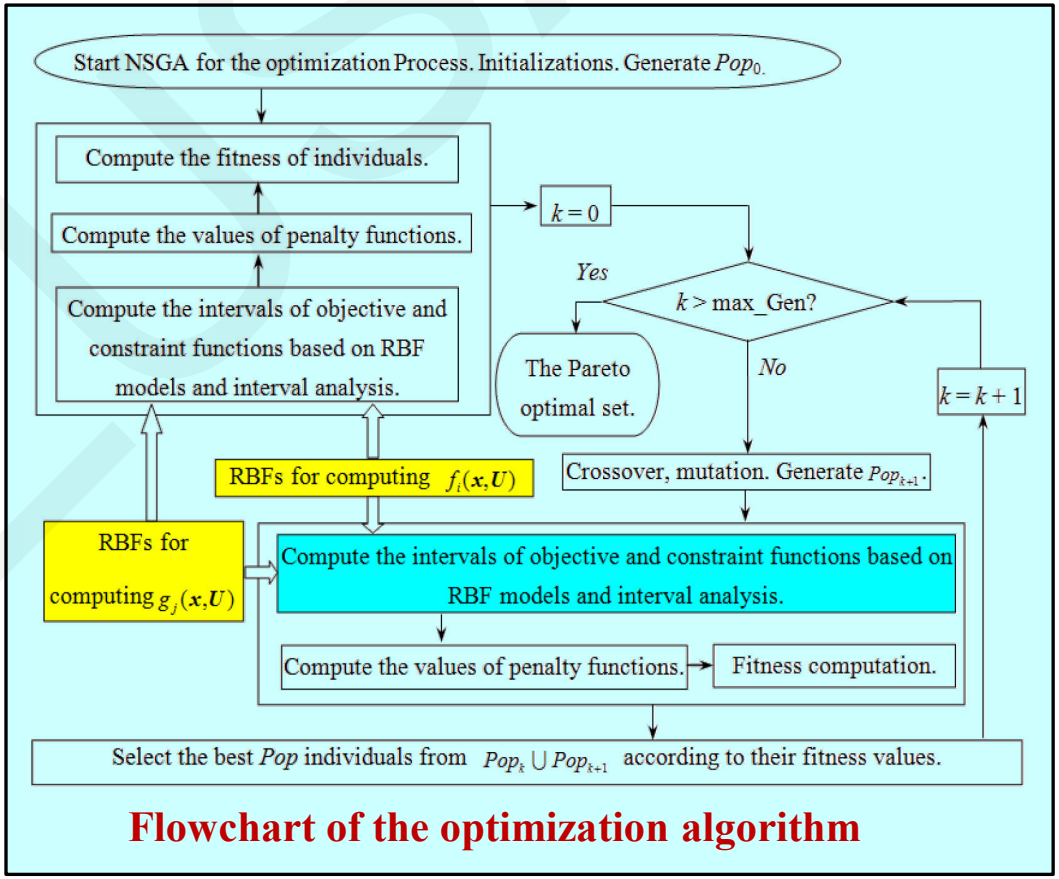

Flowchart of the optimization algorithm

Application in optimization of a press slider

Objective of the slider design: high stiffness, high intensity and light weight.

Measurement of slider stiffness: The slider stiffness is represented by the **linear deflection** in the length direction of the slider produced under the stamping force perpendicular to its lower surface, which is dimensionless.

Interval optimization model of the slider:

$$\min_{\boldsymbol{x}} \{d(\boldsymbol{x},\boldsymbol{U}), w(\boldsymbol{x})\} = \min_{l,h,b_1,b_2,b_3} \{d(l,h,b_1,b_2,b_3,E,\nu), w(l,h,b_1,b_2,b_3)\},$$

$$s.t.\ \ \sigma(\boldsymbol{x},\boldsymbol{U}) = \sigma(l,h,b_1,b_2,b_3,E,\nu) \le 45\text{MPa},$$

$$500\text{mm} \le l \le 680\text{mm},$$

$$700\text{mm} \le h \le 910\text{mm},$$

$$40\text{mm} \le b_1 \le 120\text{mm},$$

$$20\text{mm} \le b_2 \le 80\text{mm},$$

$$15\text{mm} \le b_3 \le 50\text{mm}.$$

$$E = [1.26\times10^5\,\text{MPa}, 1.54\times10^5\,\text{MPa}],$$

$$\nu = [0.23, 0.27].$$

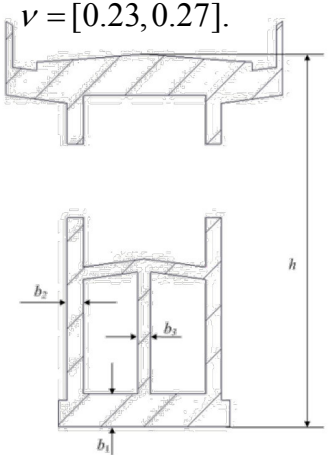

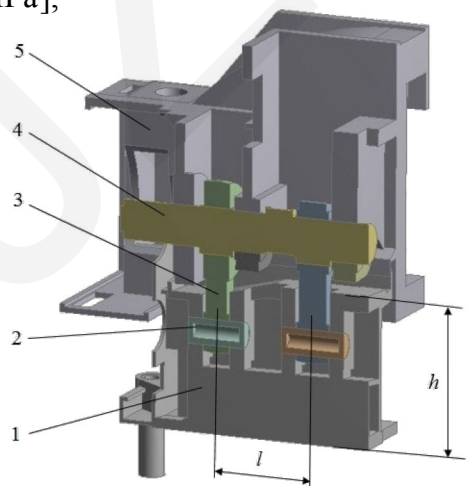

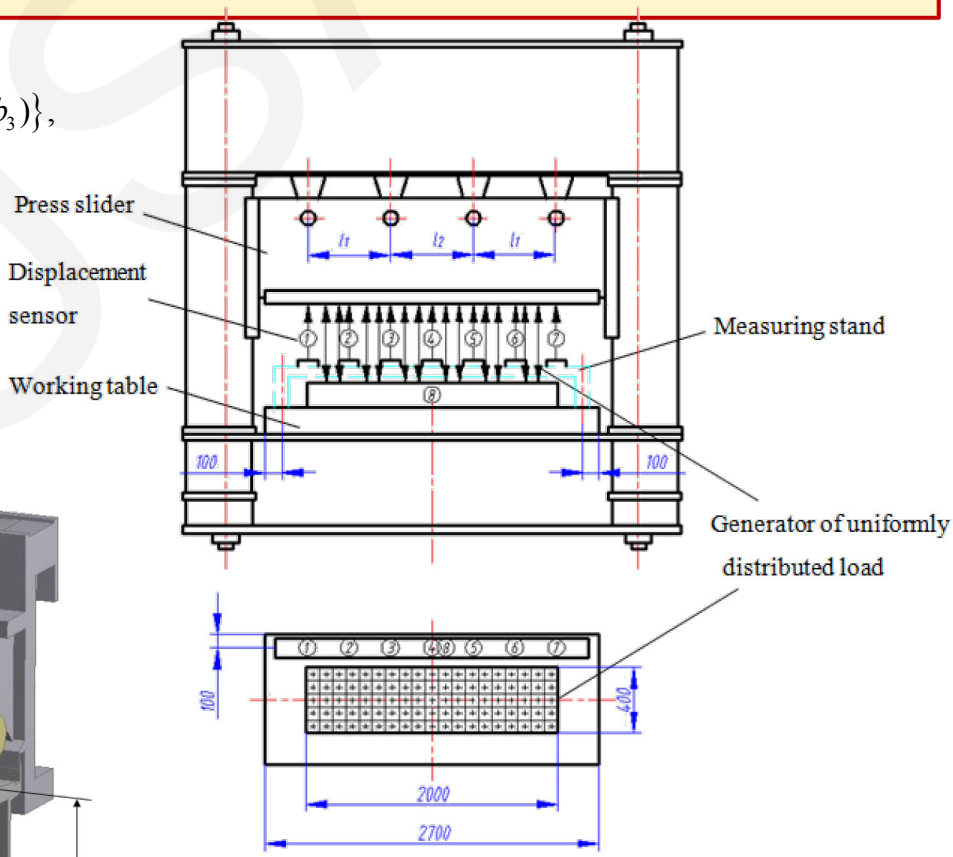

Deflection of the slider $d = \left(\delta_4 - (\delta_1 + \delta_7)/2\right)/(2l_1 + l_2)$, where δ_1, δ_4, δ_7 are the displacements indicated by ①, ④, ⑦ .

Application in optimization of a press slider

The Pareto-optimal solutions to the interval optimization problem of the press slider are located by the proposed algorithm. An experimental prototype of the high speed press was manufactured to verify the validity of proposed methodology.

FE model of 1/4 press slider: loads and constraints

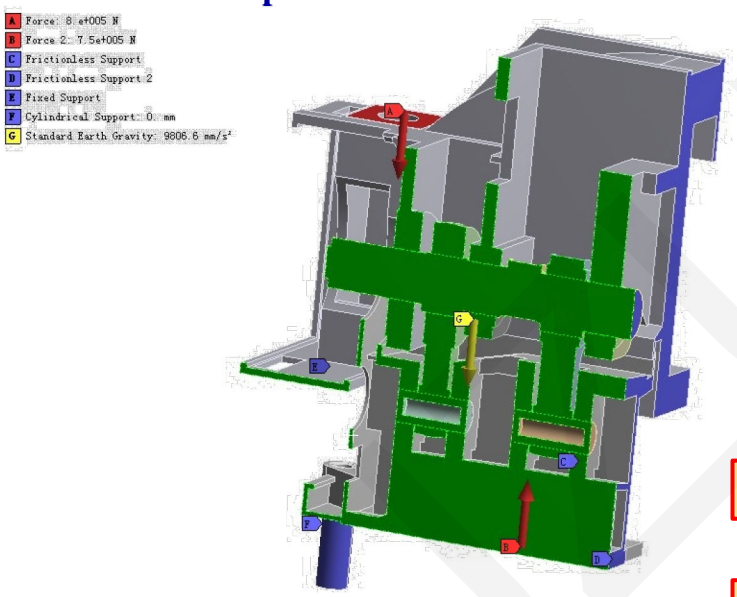

Ten Pareto-optimal solutions

No.	Design vector (l,h,b_1,b_2,b_3)	Weight w/Kg	Penalty function of deflection $d_p(\times10^{-5})$	Interval of deflection d $(\times10^{-5})$
1	(652.7, 900.3, 51.7, 71.2, 39.9)	1321.8	1.58	[1.763, 2.213]
2	(648.5, 889.9, 46.1, 67.8, 36.7)	1269.6	1.63	[1.805, 2.273]
3	(648.8, 888.6, 42.7, 61.7, 36.6)	1227.0	1.68	[1.842, 2.328]
4	(615.2, 895.7, 43.1, 52.4, 39.1)	1193.3	1.71	[1.977, 2.449]
5	(645.8, 888.4, 43.4, 42.1, 36.8)	1124.7	1.78	[2.002, 2.504]
6	(653.9, 884.3, 42.6, 33.2, 38.6)	1074.9	1.86	[2.106, 2.630]
7	(615.7, 908.7, 40.6, 25.1, 31.2)	1023.6	1.97	[2.378, 2.902]
8	**(658.5, 874.9, 51.3, 22.8, 18.8)**	**999.17**	**2.02**	**[2.419, 2.969]**
9	(612.7, 788.7, 41.1, 25.5, 25.2)	946.70	2.24	[2.840, 3.404]
10	(625.3, 757.7, 41.6, 20.2, 16.7)	897.03	2.47	[2.933, 3.599]

