# 2DOF hybrid energy harvester based on combined piezoelectric and electromagnetic conversion mechanisms

Cite this as: Hong-yan WANG, Li-hua Tang, Yuan GUO, Xiao-biao SHAN, Tao XIE , 2014. 2DOF hybrid energy harvester based on combined piezoelectric and electromagnetic conversion mechanisms. *Journal of Zhejiang University-SCIENCE A (Applied Physics & Engineering)*, 15(9):711-722. [doi:10.1631/jzus.A1400124]

# 1DOF harvester model

A conventional vibration energy harvester is usually designed as a one-degree-of-freedom (1DOF) lumped parameter model. Fig.1 and Fig.2 show a 1DOF piezoelectric energy harvester (PEH) model and a 1DOF electromagnetic energy harvester (EMEH) model, respectively. The 1DOF PEH model comprises a mass $M_1$, spring $K_1$, damping $C_1$, and the piezoelectric element. The piezoelectric element is placed between the base and the mass, generating alternating electrical output to power the resistor $R_{L1}$. The 1DOF EMEH model comprises the mass $M_2$, spring $K_2$, and damper $C_2$, where the magnetic mass $M_2$ vibrates through the axis of a wound coil. The coil is moving together with the base motions and current is induced in the electromagnetic energy harvesting coil, delivering power to the resistor $R_{L2}$.

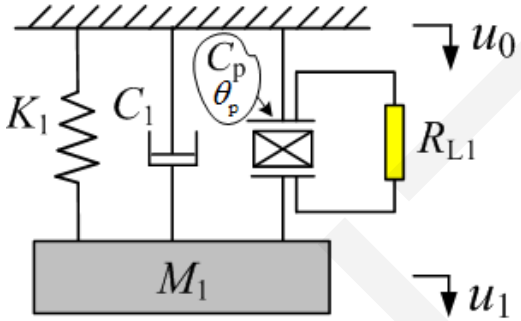


Fig. 1 1DOF PEH model

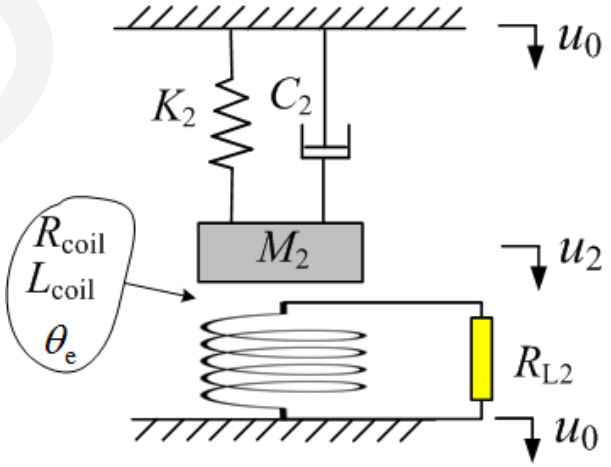


Fig. 2 1DOF EMEH model

# 2DOF harvester model

The 1DOF energy harvester model is only efficient near its sole resonant frequency. This drawback of the 1DOF model limits its applicability in the frequency-variant or random vibration scenarios. In recent studies, some researchers have proposed 2DOF energy harvester models to achieve two closer resonant frequencies. Fig.3 and Fig.4 show a typical 2DOF PEH model and a typical 2DOF EMEH model, respectively, where the mechanical subsystem ($M_2$+$K_2$+$C_2$) in the 2DOF PEH model and the mechanical subsystem ($M_1$+$K_1$+$C_1$) in the 2DOF EMEH model are used to achieve two close resonant frequencies for their respective harvesters and thus a wider operating bandwidth compared to 1DOF harvester.

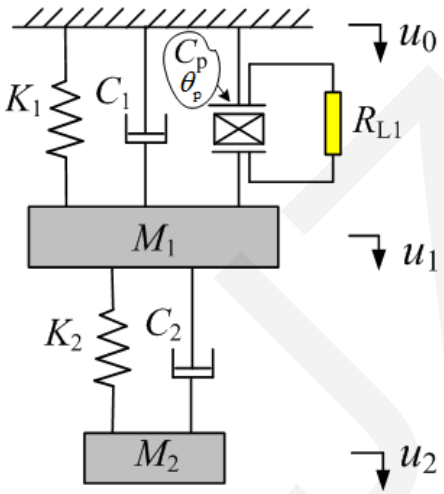


Fig. 3 2DOF PEH model

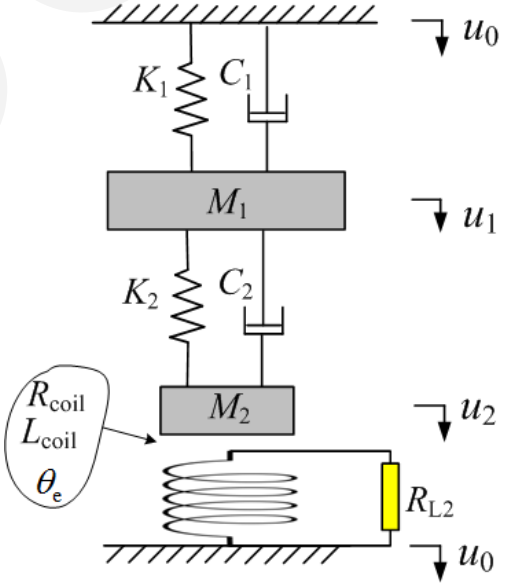


Fig. 4 2DOF EMEH model

# Hybrid 2DOF harvester model

In this paper, we propose a 2DOF hybrid P-EMEH model (Fig.5). As the base vibrates, the piezoelectric transducer placed between the base and the mass $M_1$ is deformed to generate the voltage across the resistor $R_{L1}$. At the same time, the magnetic mass $M_2$ moves in and out of the coil and the coil generates induced current flowing through the resistor $R_{L2}$. With this design, we aim at exploiting the full potential of the additional mechanical subsystem in a conventional 2DOF energy harvester model. The prototype of the proposed 2DOF hybrid P-EMEH is given in Fig.6.

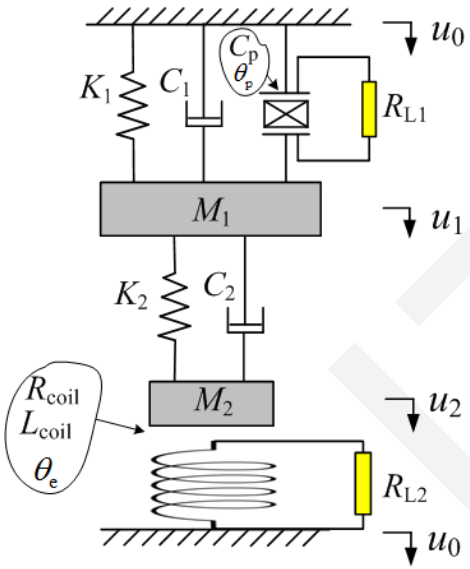


Fig. 5 2DOF hybrid P-EMEH model

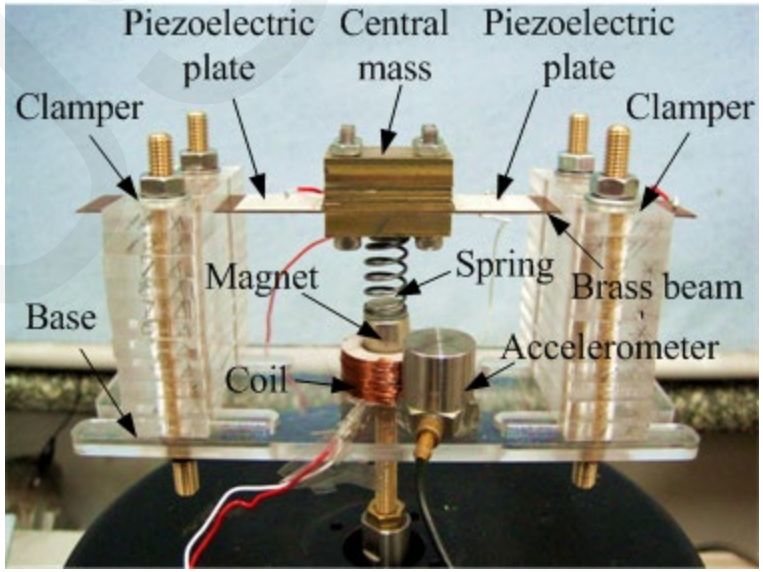


Fig. 6 Experimental prototype of 2DOF hybrid P-EMEH

# Experiment setup

Fig.7 shows the experiment setup of 2DOF hybrid P-EMEH. The signal generator and power amplifier are tuned manually to provide the desired excitation to the system. An accelerometer is mounted on the platform of the harvester to measure the base excitations. The output terminals of the piezoelectric elements and the wound coil are connected to two respective variable resistors. The generated voltage in the resistors is measured using the oscilloscope.

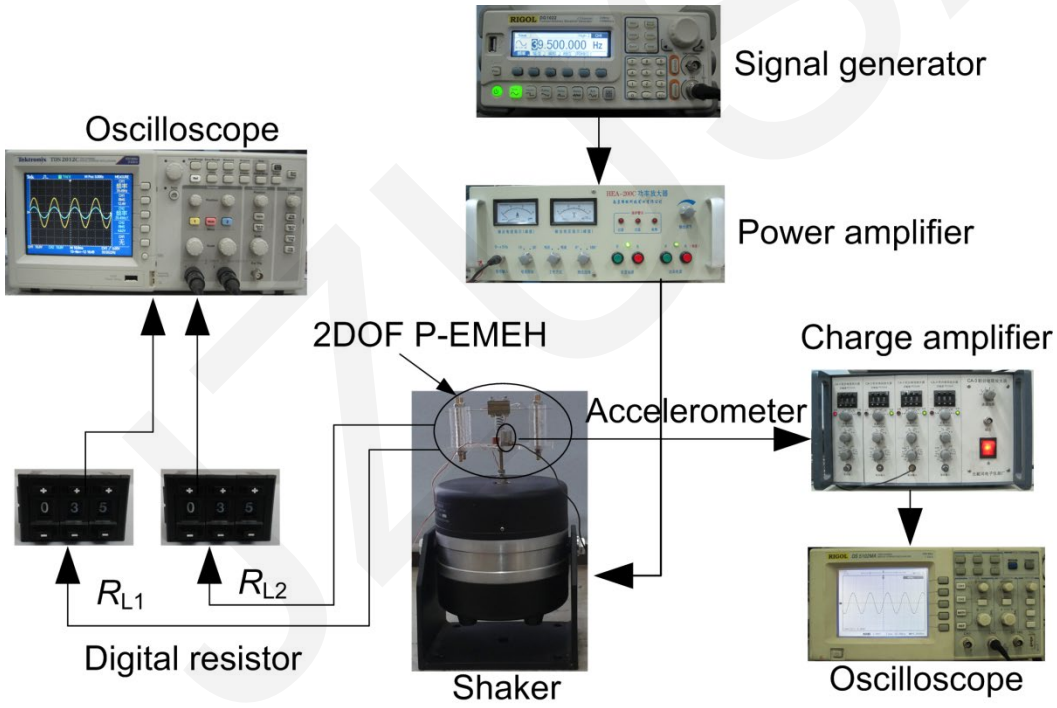


**Fig. 7 Experiment setup of 2DOF hybrid P-EMEH**

# Experiment results

Fig.8 shows the experimental power outputs from various harvester configurations. In Fig.8, the 2DOF hybrid P-EMEH has improved the maximum power output (2.16 mW) as compared to the 2DOF PEH (0.96 mW) and 1DOF PEH (0.69 mW). Similarly, the 2DOF hybrid P-EMEH also provides a better performance than the 2DOF EMEH (1.68 mW) and 1DOF EMEH (0.48 mW).

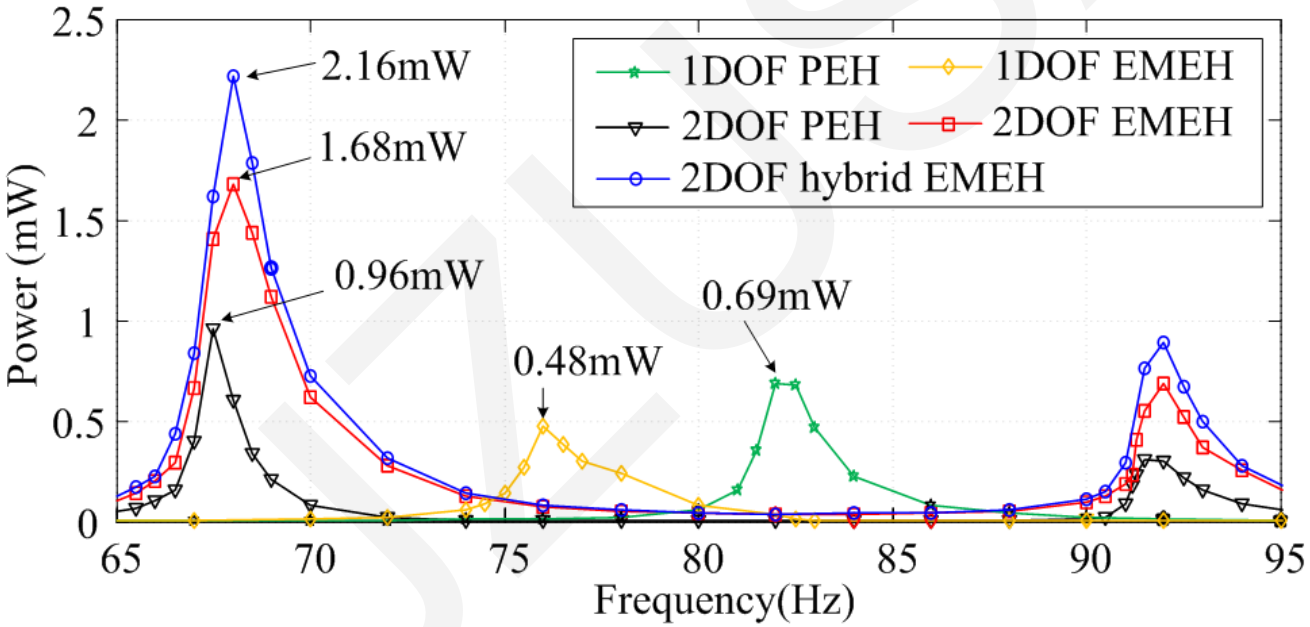


**Fig. 8 Experimental power outputs from various harvester configurations**

# Discussion on effects of electromechanical coupling

Based on the established mathematical model and the parameters determined from the experiments, the effects of the effective electromechanical coupling coefficients (EMCC) on the maximum power outputs are analyzed numerically. Figs.9(a) and 9(b) show the maximum power outputs from piezoelectric and electromagnetic transducers used in a 2DOF hybrid P-EMEH against two effective EMCCs $k_p$ and $k_e$, respectively. The results indicate that when piezoelectric and electromagnetic transducers exist in an energy harvesting device, they interact in an opposite way. i.e., the increase of the power output from one electromechanical transducer by increasing its coupling will lead to the decrease of the power output from the other. However, the total power outputs increases before it reaches its saturation.

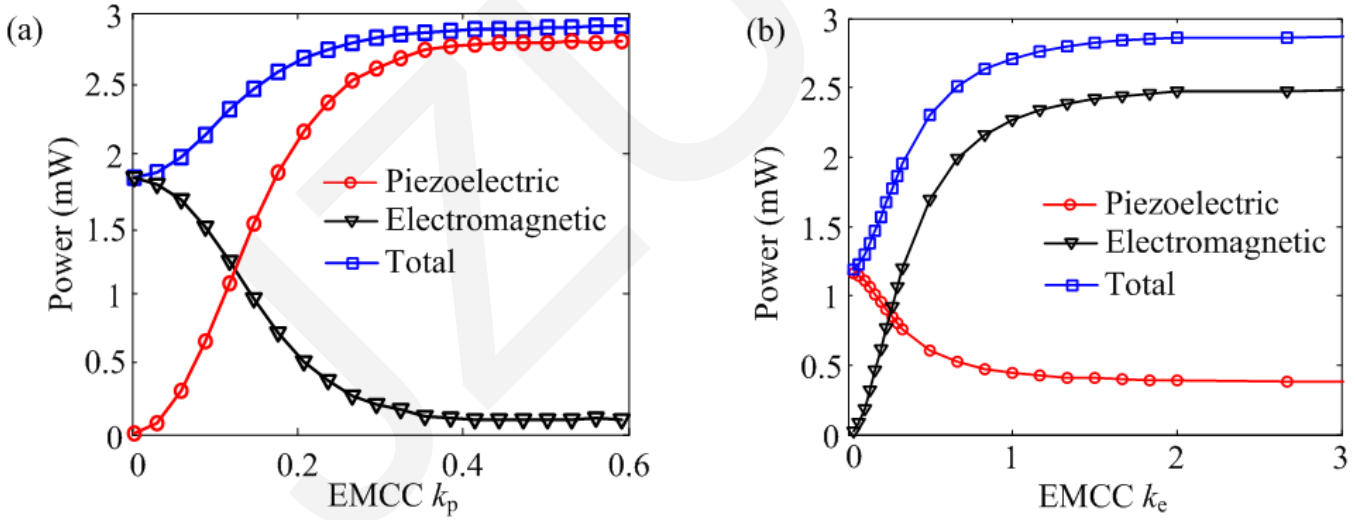


**Fig. 9 Maximum power outputs from 2DOF hybrid P-EMEH versus (a) piezoelectric EMCC $k_p$ ($k_e$=0.4277) and (b) electromagnetic EMCC $k_e$ ($k_p$=0.086)**

# Discussion on effects of electromechanical coupling

Figs.10(a) and 10(b) show the maximum power outputs from various harvester configurations against two effective EMCCs $k_p$ and $k_e$, respectively. It can be seen from Fig.10(a) that an increase of $k_p$ leads to an increase in power outputs in the 1DOF PEH, 2DOF PEH, and 2DOF hybrid P-EMEH models first, but finally the power outputs reach saturation in each case. In the weak and medium coupling range ($0<k_p<0.2$), the 2DOF hybrid P-EMEH has an improved power output as compared to the 1DOF PEH and 2DOF PEH. In Fig.10(b), A similar trend can be seen for 1DOF EMEH, 2DOF EMEH, and 2DOF hybrid P-EMEH models. In the weak and medium coupling range ($0<k_e<0.9$), the 2DOF hybrid P-EMEH provides better performance than the 2DOF EMEH and 1DOF EMEH.

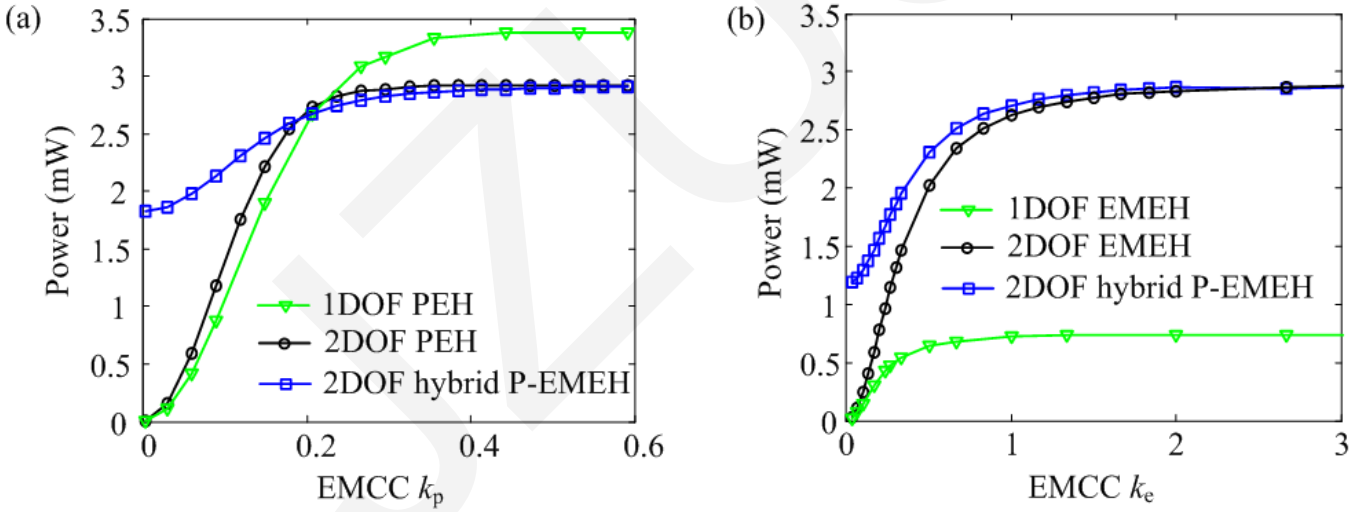


**Fig. 10 Maximum power outputs from various harvester configurations versus (a) piezoelectric EMCC $k_p$ ($k_e$=0.4277) and (b) electromagnetic EMCC $k_e$ ($k_p$=0.086)**

# Conclusions

This paper presents a 2DOF hybrid P-EMEH design combing piezoelectric and electromagnetic transduction mechanisms. The mathematical model of the 2DOF hybrid P-EMEH is established and validated experimentally. The prototype 2DOF hybrid P-EMEH demonstrates its advantageous performance in terms of both wider bandwidth and improved power magnitude as compared to conventional 1DOF and 2DOF harvester configurations with stand-alone conversion mechanisms. With the validated mathematical model, the effect of the piezoelectric and electromagnetic coupling coefficients on the performances of various harvester configurations is analyzed. For the 2DOF hybrid P-EMEH model, although the increase of the power output from one electromechanical transducer will lead to the decrease of the power output from the other, the total power output of the 2DOF hybrid P-EMEH model increases before it reaches its saturation. In the weak and medium coupling scenarios, the hybrid 2DOF energy harvester configuration provides an efficient way to enhance device performance.

# Some papers related to this research work


[1] Wang, H.Y., Shan, X.B., Xie, T., 2012. An energy harvester combining a piezoelectric cantilever and a single degree of freedom elastic system. *Journal of Zhejiang University SCIENCE-A (Applying Physics & Engineering)*, 13(7): 526-537. [doi:10.1631/jzus.A1100344]

[2] Tang, L.H., Yang, Y.W., 2012. A multiple-degree-of-freedom piezoelectric energy harvesting model. *Journal of Intelligent Material Systems and Structures*, 23(14): 1631-1647. [doi:10.1177/1045389X12449920]

[3] Shan, X.B., Guan, S.W., Liu, Z.S., et al., 2013. A new energy harvester using a piezoelectric and suspension electromagnetic mechanism. *Journal of Zhejiang University SCIENCE-A (Applying Physics & Engineering)*, 14(12):890-897. [doi:10.1631/jzus.A1300210]

[4] Wang, H.Y., Tang, L.H., Shan, X.B., Xie, T., Yang, Y.W., 2014. Modeling and performance evaluation of a piezoelectric energy harvester with segmented electrodes. *Smart Structures and Systems*, 14(2): 247-266. [doi: 10.12989/sss.2014.14.2.247]