JOURNAL OF ZHEJIANG UNIVERSITY SCIENCE ABC

Research on the slagging characteristics of blended coals in a pilot-scale furnace

Key words: Blended coal, Ash deposit, Slagging, CCD camera, Mineralogy

JZUSA

- Cite this as: Hao Zhou, Le-tian Li, Hai-long Zhang, Bin Zhou, 2015. Research on the slagging characteristics of blended coals in a pilot-scale furnace. *Journal of Zhejiang University-SCIENCE A (Applied Physics & Engineering)*, 16(3):204-216. [doi:10.1631/jzus.A1400172]

- A number of thermal power plants were designed to combust specific fuels. Because supply may be limited or fuels for which the plants were originally designed are now uneconomical, different fuels are now used. Blending of coals can be used to satisfy the requirements of given utilities. Possible advantages for power plants include reducing fuel costs, using more acceptable coals, and improving operational performance.
- Nowadays, the use of several different coals being blended to satisfy power plant requirements has succeeded at some plants, whereas this has caused some unexpected problems at other sites.
- It is uncertain how a combination of parameters from individual coals will affect power station performance. In the furnace, the interaction between the individual ash particles only happens on the depositional surface and it could be greatly nonlinear.

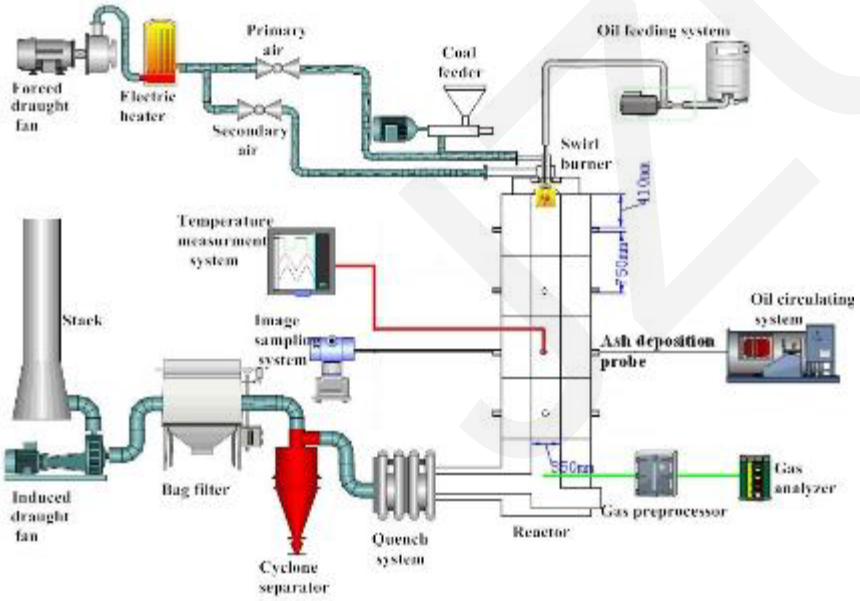

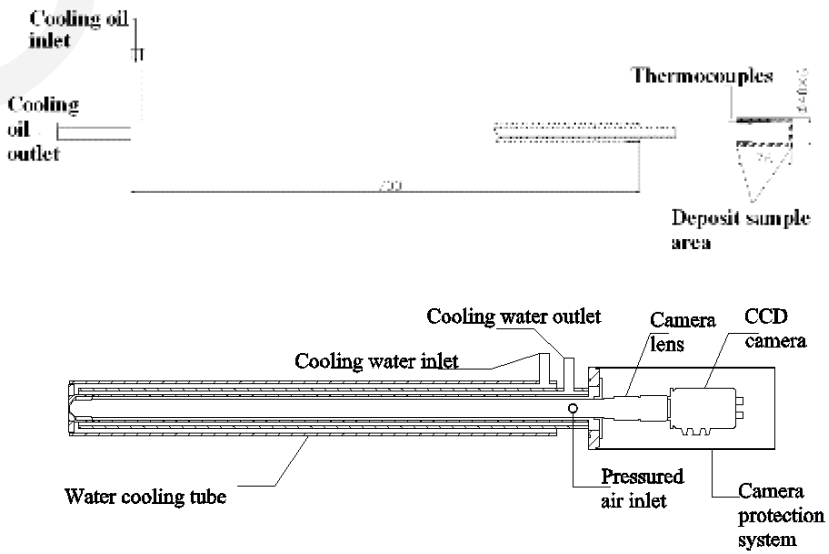

METHOD

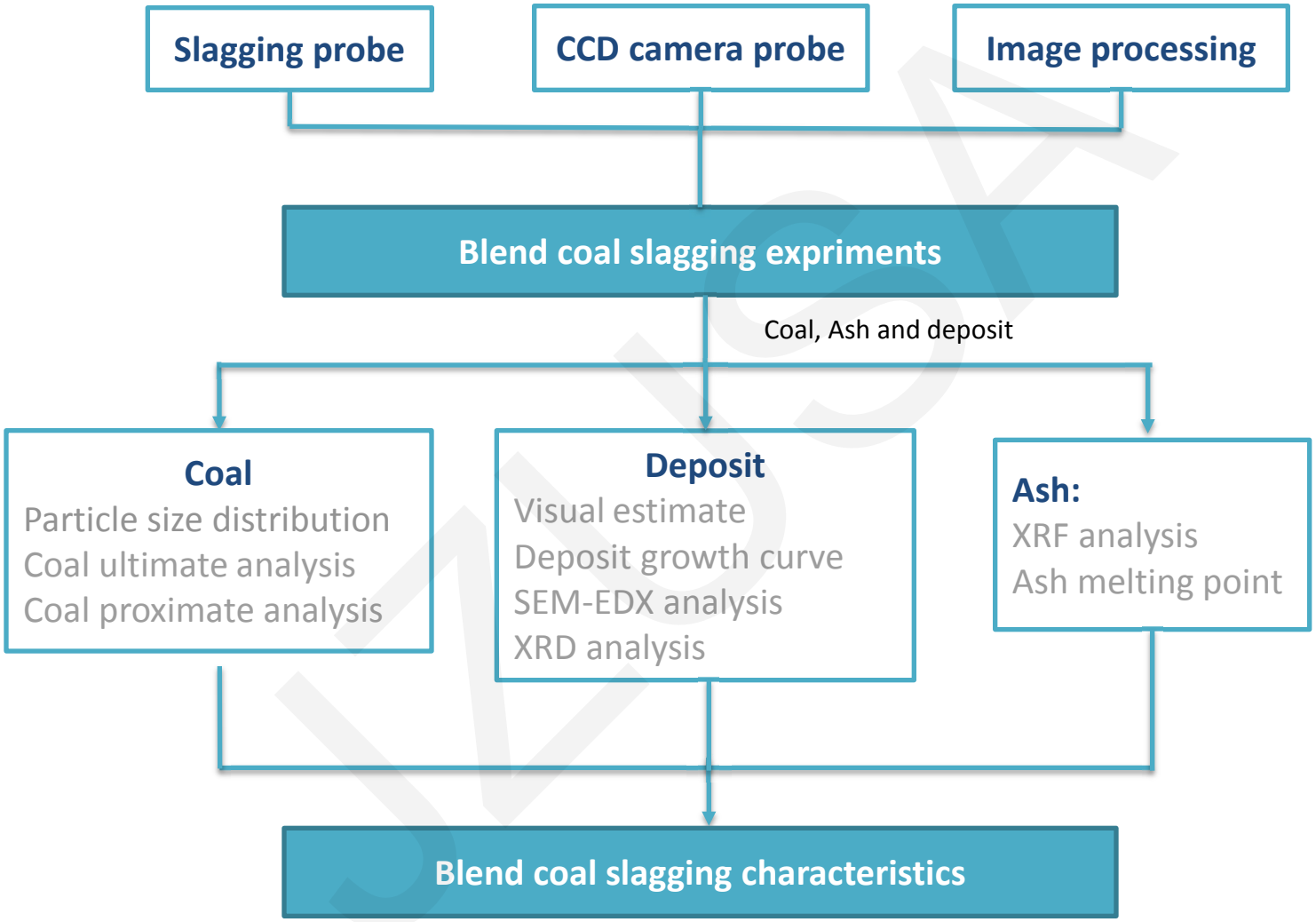
Slagging probe
CCD camera probe
Image processing
Blend coal slagging expriments
Coal, Ash and deposit
Coal
Particle size distribution
Coal ultimate analysis
Coal proximate analysis
Deposit
Visual estimate
Deposit growth curve
SEM-EDX analysis
XRD analysis
Ash:
XRF analysis
Ash melting point
Blend coal slagging characteristics

RESULTS AND CONLUSIONS

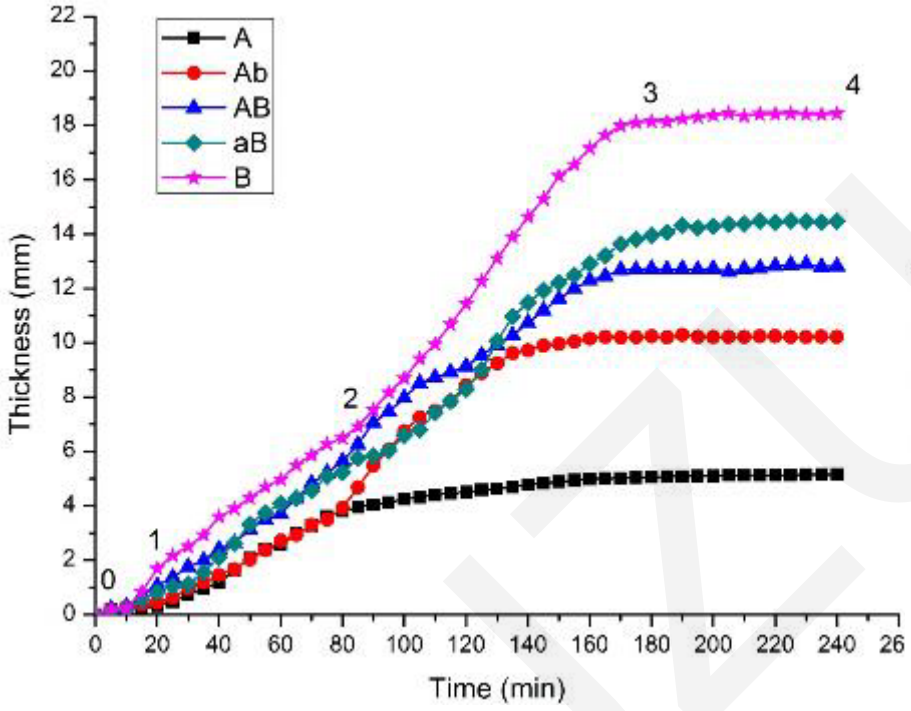

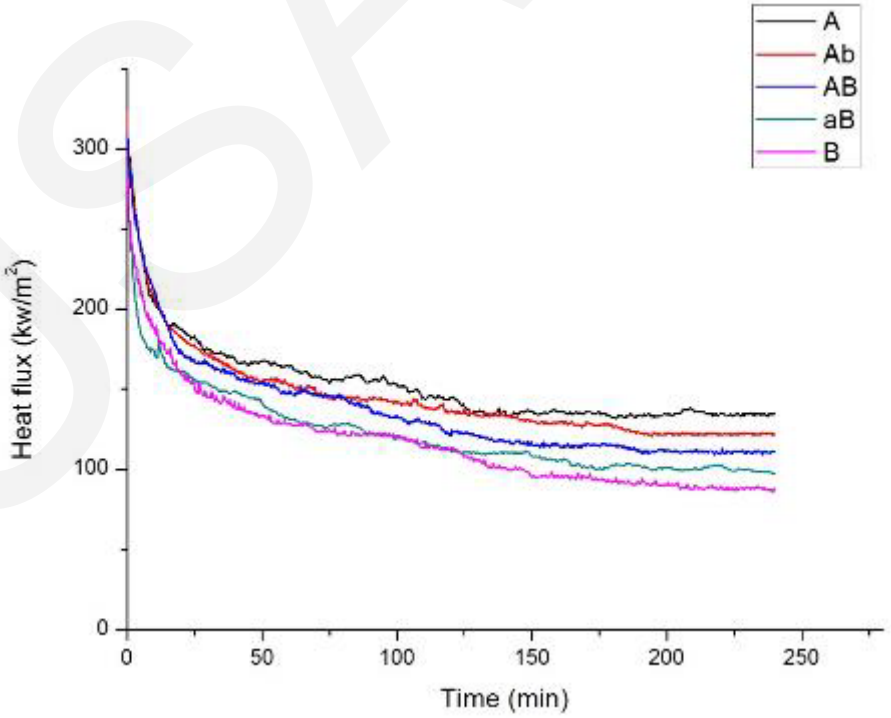

JZUSA

RESULTS AND CONLUSIONS

- The thickness of the five deposits were 5.1, 10.2, 12.8, 14.5, and 18.4 mm, increasing with the ratio of coal B. The slagging severity of the three blends were different between that of the component coals which suggested no great nonlinear interaction happened on the sampling probe. The time to reach the stable stage increased with the ratio of coal B.

- The elementary composition of the five deposits showed that silicon, aluminum, and calcium occupied a large proportion in the deposits, which affected ash deposition. According to the result of XRD analysis, quartz, albite, anorthite, and $(Ca_{0.68}Na_{0.32})(Al_{1.68}Si_{0.32})\ Si_2O_8$, decreased along the direction of the deposit growth.

JZUSA