Journal of Zhejiang University-SCIENCE A
(Applied Physics & Engineering)

Experimental study of the shear properties of reinforced ultra-high toughness cementitious composite beams

Cite this as: Li-jun HOU, Zhi-yong LUAN, Da CHEN, Shi-lang XU, 2015. Experimental study of the shear properties of reinforced ultra-high toughness cementitious composite beams. *Journal of Zhejiang University-SCIENCE A (Applied Physics & Engineering)*, 16(4):251-264. [doi:10.1631/jzus.A1400274]

Introduction

Ultra-high toughness cementitious composite (UHTCC):

- Strain hardening behavior under uniaxial tension, ε_{tu}>3%.
- Excellent crack dispersion capacity, with crack spacing below 0.1 mm.
- High toughness capacity and outstanding flexural deformation capability.

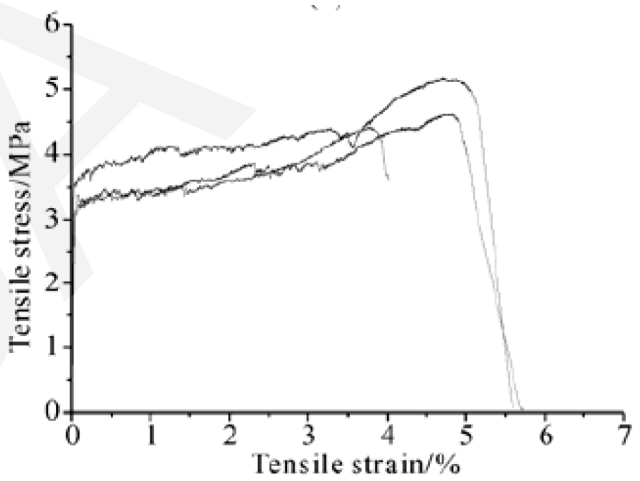

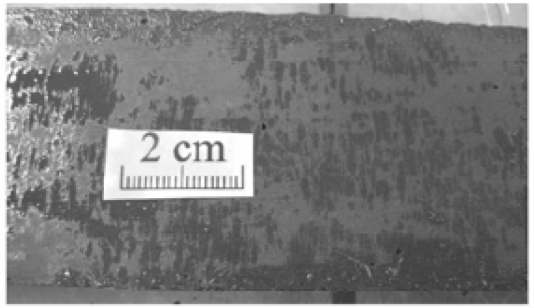

Tensile behavior of UHTCC

Objective

- **To evaluate the shear behaviors of RUHTCC beams with different shear-span ratios and stirrups ratios**
- **To provide a reference for the use of UHTCC in the key shear members.**

JZUSA

Experimental program

Parameters

Shear-span ratios:

2.06; 3.08; 4.11

Stirrup ratios:

0% (w0)、0.25% (wl)、

0.37% (wm)、0.55% (wh)

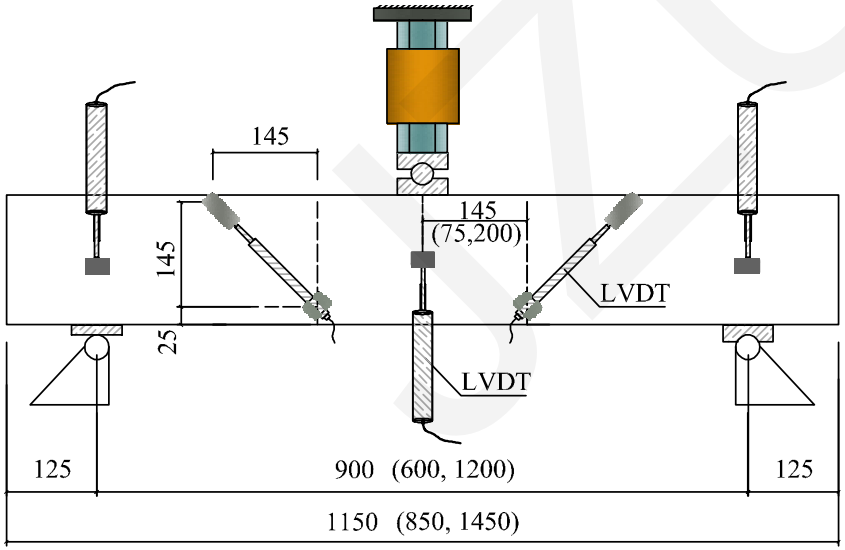

Loading set-up and test apparatus

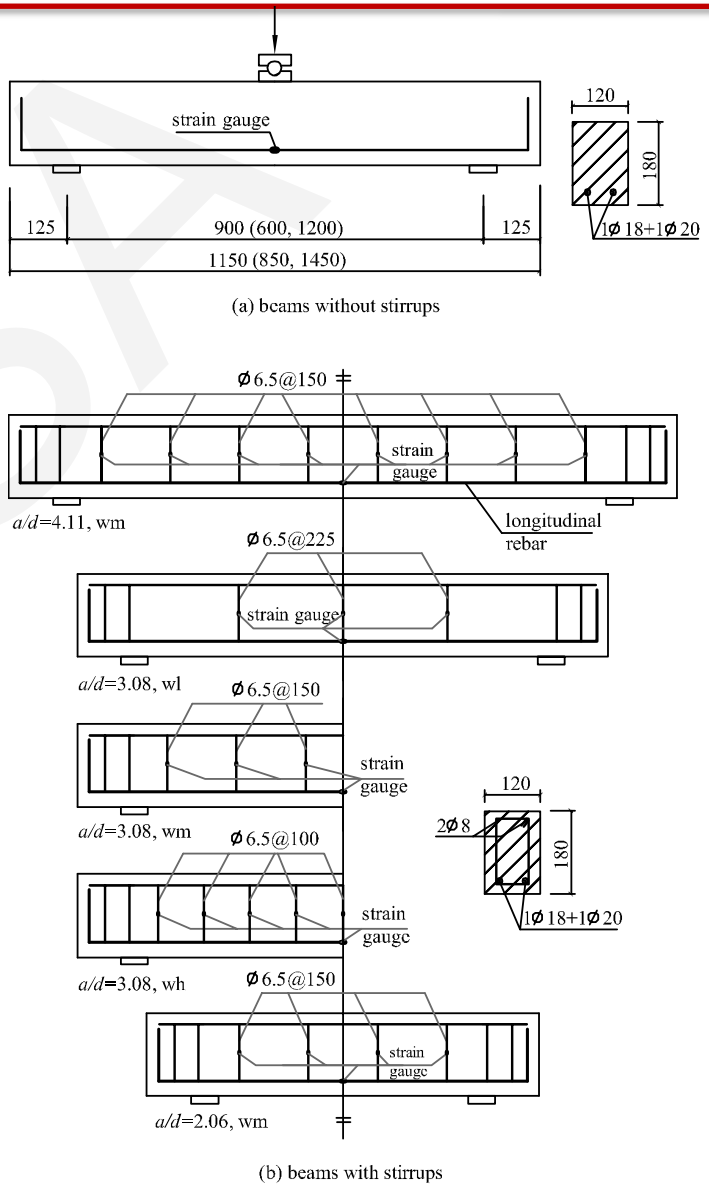

Beam configuration

Results-Shear crack pattern

- Apparent diagonal multiple cracking mode
- No splitting crack along longitudinal rebar for RUHTCC beams
- The decreasing number of inclined cracks in slender RUHTCC beams with an increase in stirrup ratio

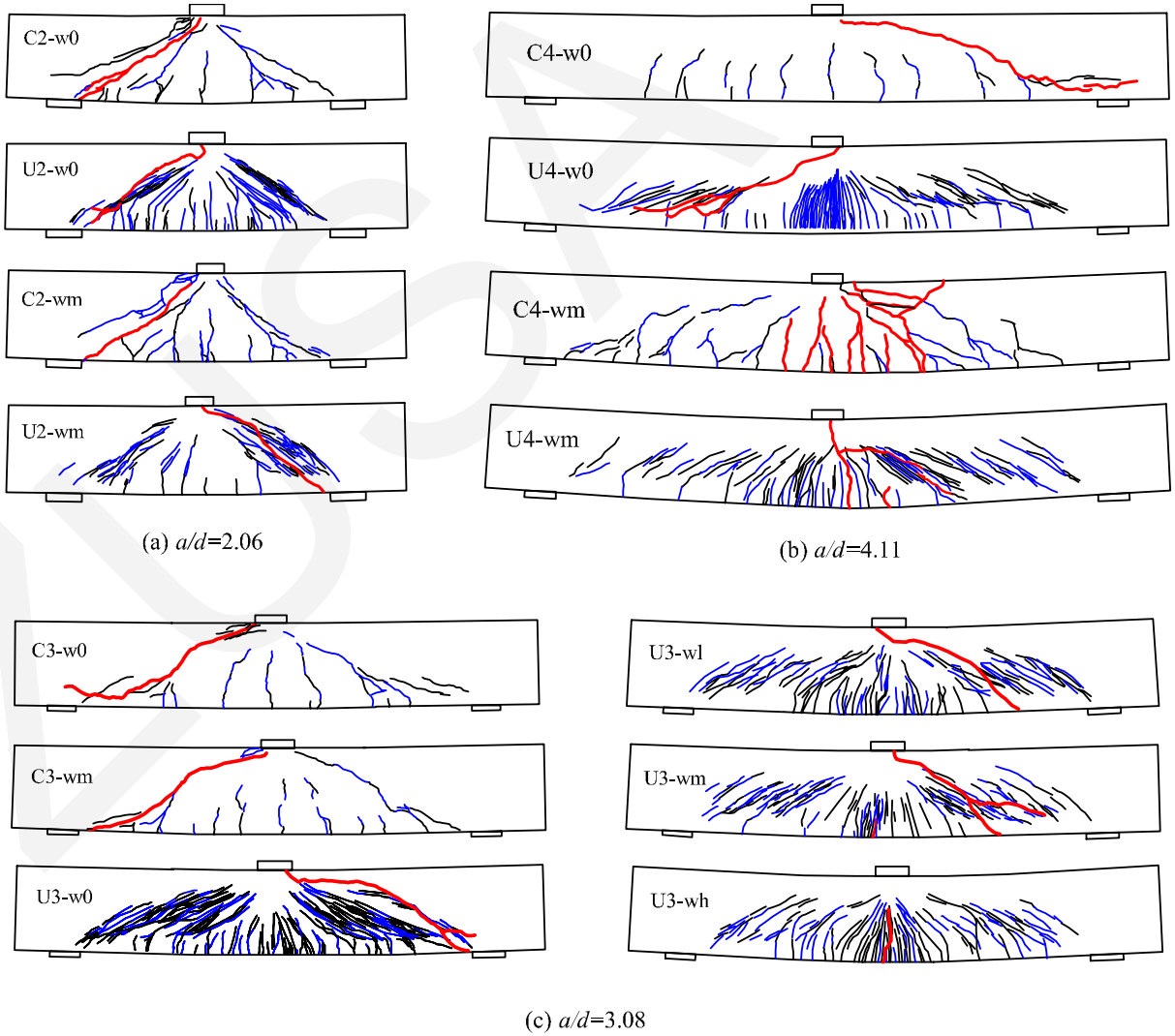

Shear ceack pattern

Results-Shear crack

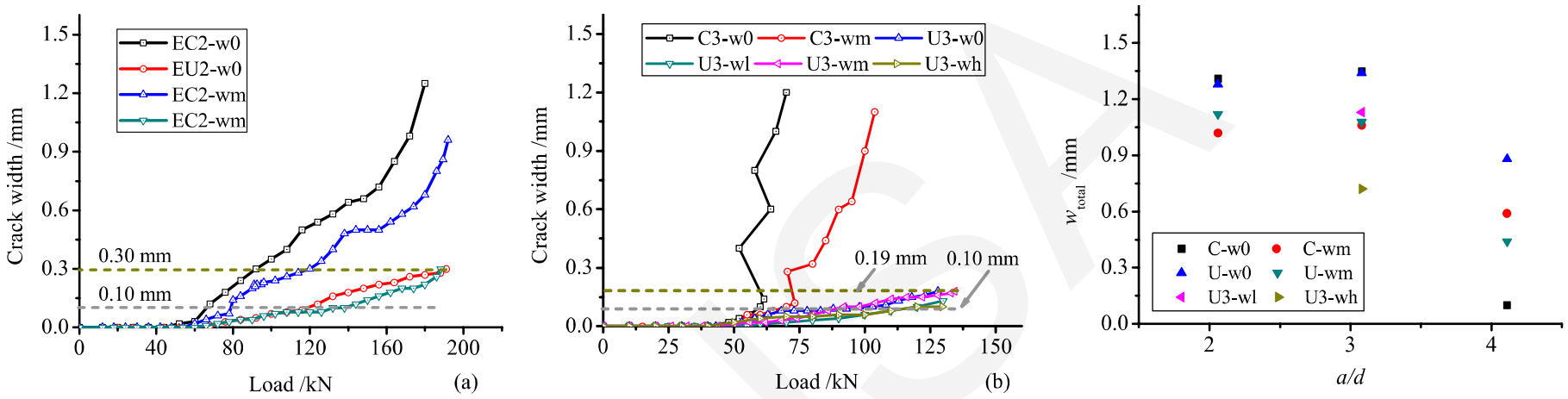

Evolution of the maximum diagonal crack width

Total diagonal crack width

- RUHTCC beams showed a stable diagonal crack propagation
- At the service state, a maximum crack width of 0.3 mm for short RUHTCC beams and 0.2 mm for slender beams
- Beams with stirrups had a smaller total diagonal crack opening than beams without stirrups
- For RC beams, w_{total} is almost same as the maximum crack width; for RUHTCC beams, w_{total} is the sum of the crack width of all the diagonal cracks

Results-load deflection behaviors

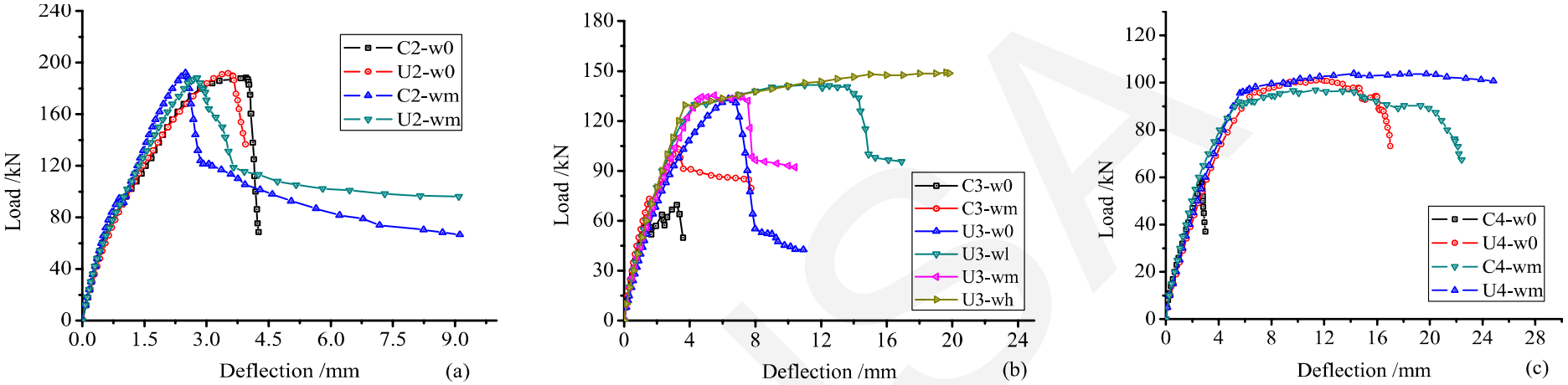

Load-deflection curves

- Failure modes: flexural failure (F); shear failure including flexural-shear failure (FS), diagonal tension failure (DT), shear tension failure (ST) and shear compression failure (SC)

- RUHTCC beams failing in flexure had a high ductility index up to 4.28~5.28, whereas other beams showing flexural yielding had ductility indexes ranging from 1.63 to 2.95, slightly lower than the suggested ductility requirement.

Results-shear strength

- v_{cr} of short beams was about 0.2~0.3 MPa larger than that of slender beams; stirrups had little influence on v_{cr}
- v_u of short beams was far larger than that of slender beams due to different shear mechanisms
- v_u of short beams was similar regardless of matrix materials and stirrup ratios due to similar f_{cu} of UHTCC and concrete resulting in a similar shear capacity of a tied-arch system

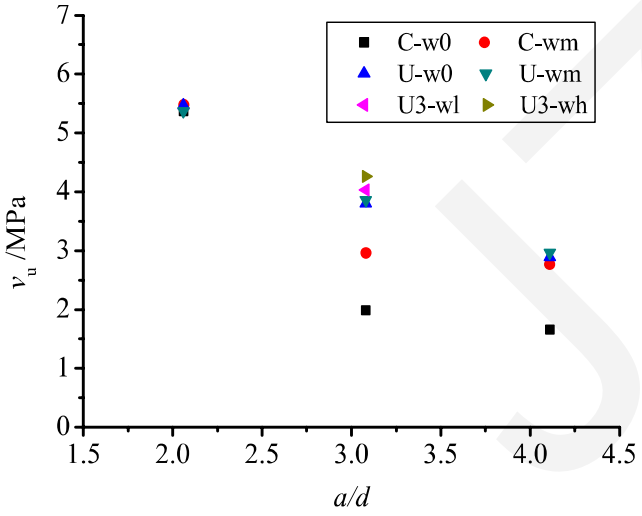

Ultimate shear strength

Table 3 Experimental results of test beams

Beam	v_{cr} /MPa	V_u /kN	v_u /MPa	δ_u /mm	δ_u/δ_y	v_u/v_{cr}	w_{total} /mm	ε_w /(μm/m)	Failure mode
C2-w0	1.89	94.16	5.37	3.94	–	2.84	1.31	–	SC
C2-wm	1.78	96.00	5.48	2.55	–	3.36	1.02	2175	SC
U2-w0	1.94	95.86	5.47	3.53	–	2.82	1.28	–	SC
U2-wm	1.88	94.10	5.37	2.77	–	2.86	1.12	1535	SC
C3-w0	1.75	34.79	1.99	3.36	–	1.13	1.21	–	ST
C3-wm	1.55	51.90	2.96	3.21	–	1.91	1.06	failure	SC
U3-w0	1.51	66.60	3.80	6.49	–	2.52	1.34	–	SC
U3-wl	1.86	70.55	4.03	12.50	2.95	2.16	1.13	2210*	SC
U3-wm	1.51	67.62	3.86	7.21	1.63	2.56	1.08	1800*	FS
U3-wh	1.57	74.55	4.26	19.60	5.28	2.71	0.72	1250*	F
C4-w0	1.66	29.15	1.66	2.72	–	1.00	0.10	–	DT
C4-wm	1.53	48.50	2.77	14.28	2.74	1.81	0.59	1703	F
U4-w0	1.63	50.67	2.89	12.48	1.96	1.77	0.88	–	FS
U4-wm	1.57	51.87	2.96	24.82	4.28	1.89	0.44	1487	F

Shear mechanism of RUHTCC beams

■ Shear resistance:

The matrix in the compression zone, the doweling action of longitudinal rebar, and **the bridging connection action of fibers** instead of the aggregate interlocking action in RC beams

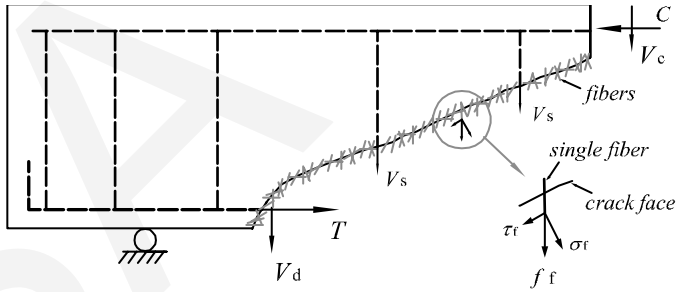

Shear transfer mode in the inclined section

■ Arch-truss shear model for RUHTCC slender beams

- Without stirrups: UHTCC tension and compression web members, UHTCC compression member and rebar tension chord
- With stirrups: stirrups and UHTCC used as inclined tension web member.

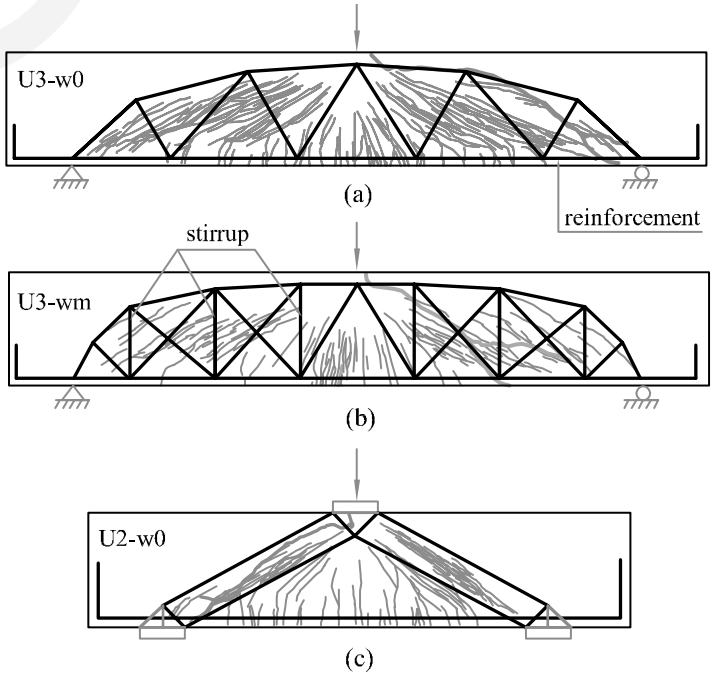

Shear transfer mechanisms for RUHTCC beams

■ Tied-arch model for RUHTCC short beams

Conclusions

■ RUHTCC beams have superior shear resistance compared with RC beams and show stable crack propagation and multiple cracking behavior in shear.

■ The use of UHTCC as the matrix of beams can serve as a replacement for minimum web reinforcement.

■ A small amount of stirrups used in RUHTCC slender beams results in a more ductile flexure-shear or even flexural failure.

■ No shear synergy between UHTCC and stirrups is obtained

■ A tied-arch model and an arch-truss model can be used to represent the shear mechanism of RUHTCC short and slender beams

JZUSA