Journal of Zhejiang University-SCIENCE A

Cite this as: Xi-ming CHENG, Li-guang YAO, Michael PECHT, 2017. Lithium-ion battery state-of-charge estimation based on deconstructed equivalent circuit at different open-circuit voltage relaxation times. *Journal of Zhejiang University-SCIENCE A (Applied Physics & Engineering)*, 18(4):256-267. http://dx.doi.org/10.1631/jzus.A1600251

Lithium-ion battery state-of-charge estimation based on deconstructed equivalent circuit at different open-circuit voltage relaxation times

Key words:

Lithium-ion batteries, Open-circuit voltage, State-of-charge, Recursive least squares, Extended Kalman filters

Background

- The circuit-based model for lithium-ion battery is more popular than the electrochemical model for SOC estimation in real time.
- However, the OCV measurements are quite time-consuming and their values have effects on the circuit model-based SOC estimation.
- Until now, there has been little literature discussing an appropriate relaxation period explored to ensure accuracy of the circuit model-based SOC estimation for a short SOC-OCV test time.

Method

- Influence of OCV measurement values at different relaxation time and temperature on two methods for battery SOC estimation including the OCV and EKF are investigated.
- A first-order RC circuit and one RC loop deconstructed from the second-order RC circuit model are used to estimate positive model parameters by the two-stage RLS for EKF-based SOC estimation.
- The two-stage RLS and EKF are combined to estimate circuit-model parameters and battery SOC for cylindrical lithium-ion cells.

Circuit Deconstruction for Two-Stage RLS

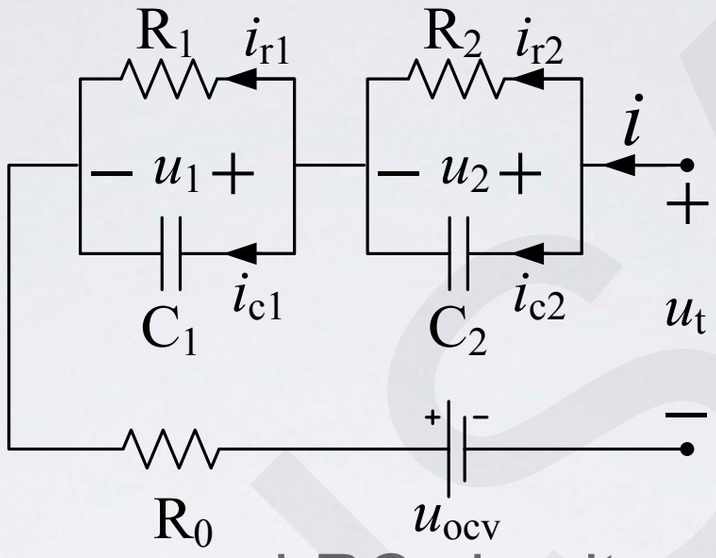

the second-RC circuit model

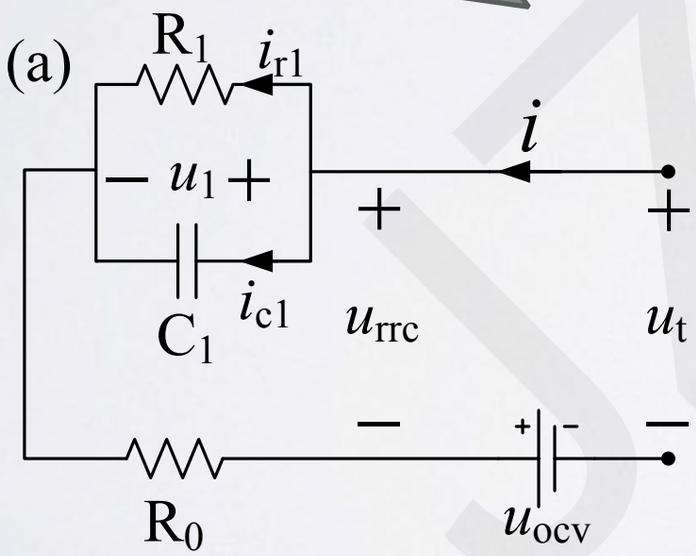

the first-RC circuit model

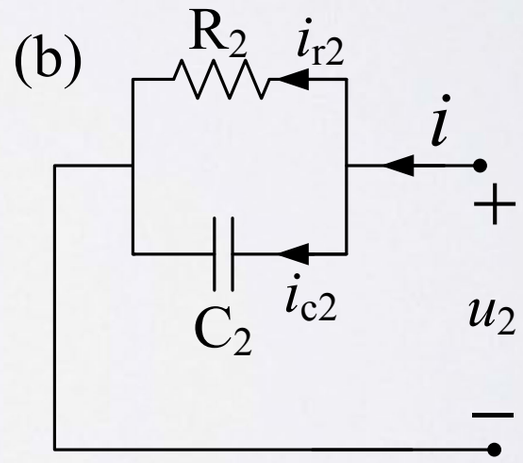

the RC loop

Combination Algorithm of RLS and EKF

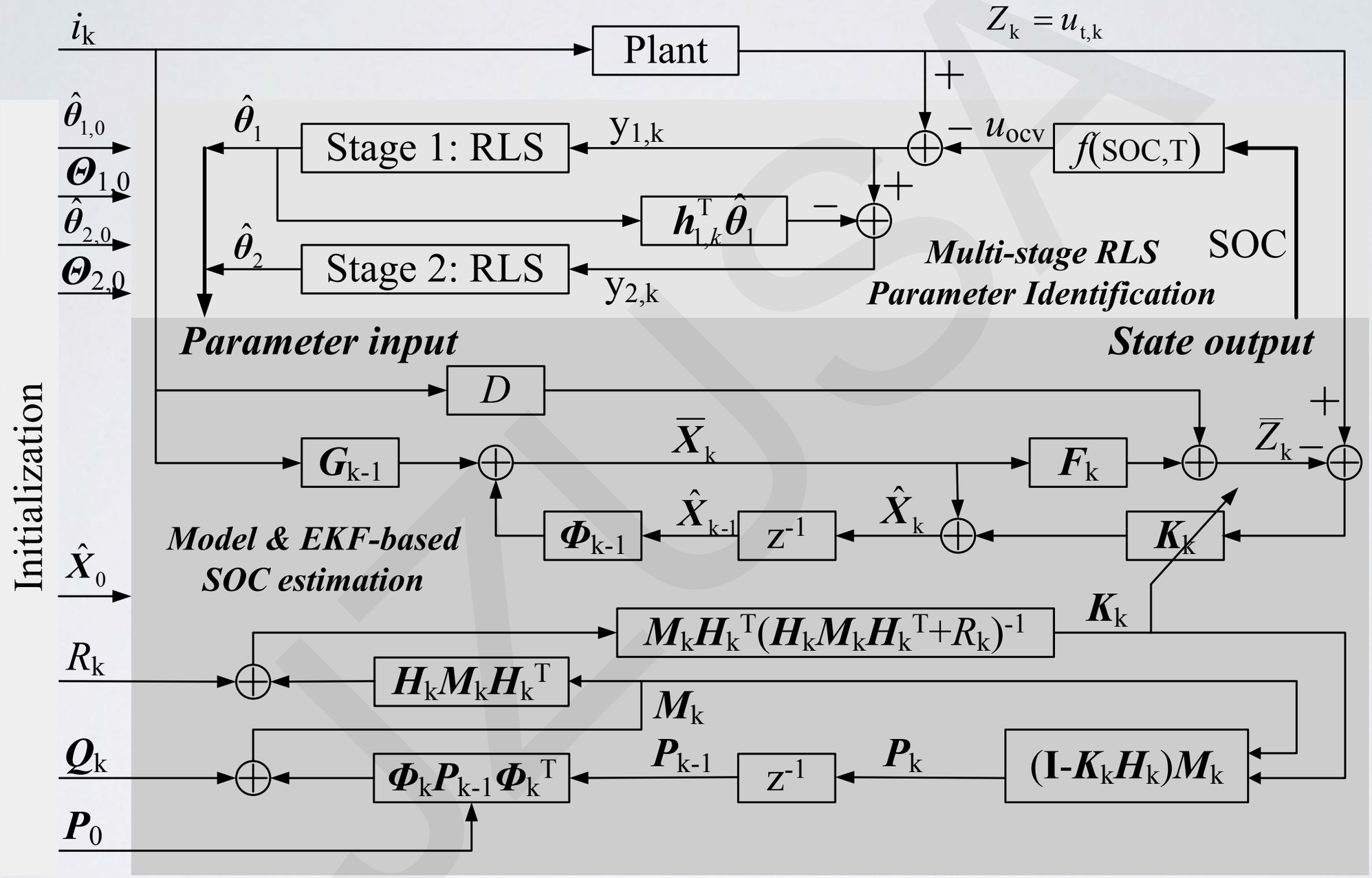

Block diagram of two-stage RLS - EKF SOC estimation algorithm

Experiments

- Three CBAK 2.0 Ah 18650 power Li-ion cells in series were placed in a temperature chamber and discharged/charged by a Digatron battery tester BNT 100-60-ME.
- Three types of battery charged/discharged tests: capacity, OCV, and drive cycle tests. The battery charging or discharging capacities were limited up to the nominal value in the OCV and drive cycle tests.
- During the charging OCV test, cells were rested for 2 h after every 10 % nominal capacity pulse charge at 0.5C above 10°C or 0.2C below 10°C. After they were fully charged and rested for 2 h, they were discharged at 20°C.

Results for OCV Measurements

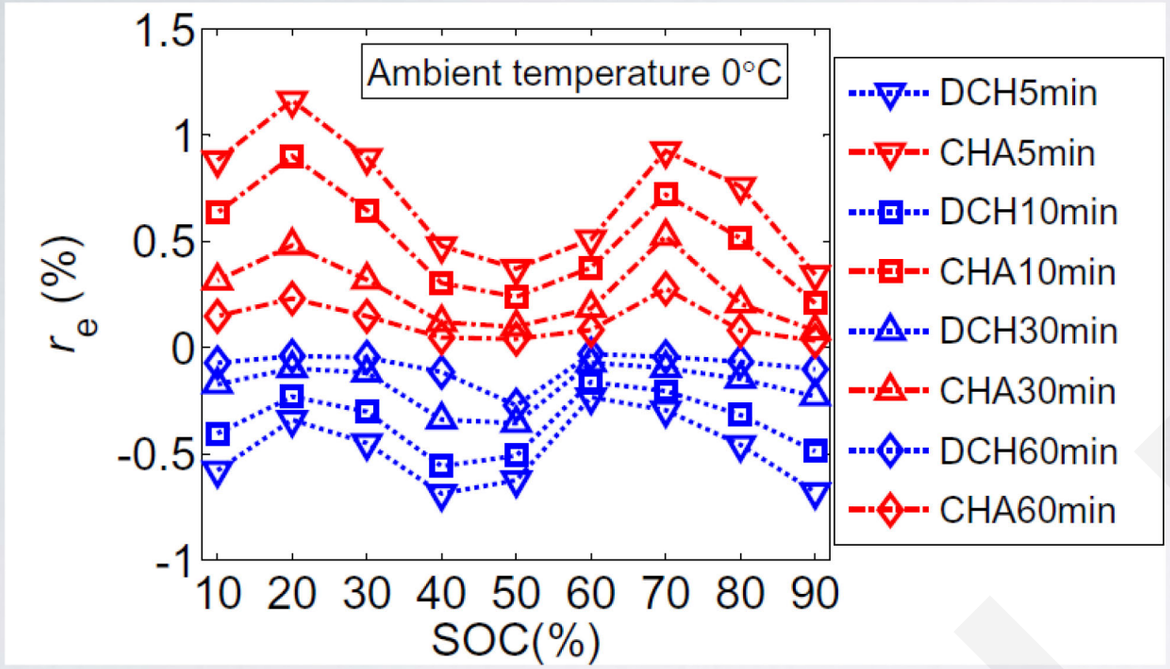

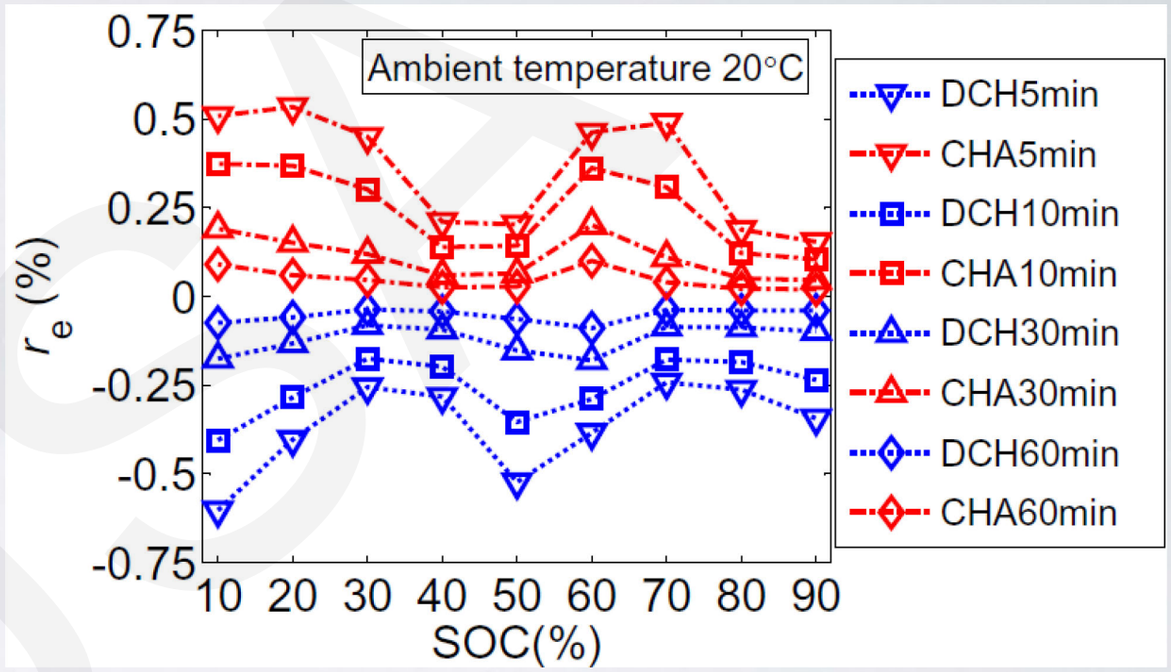

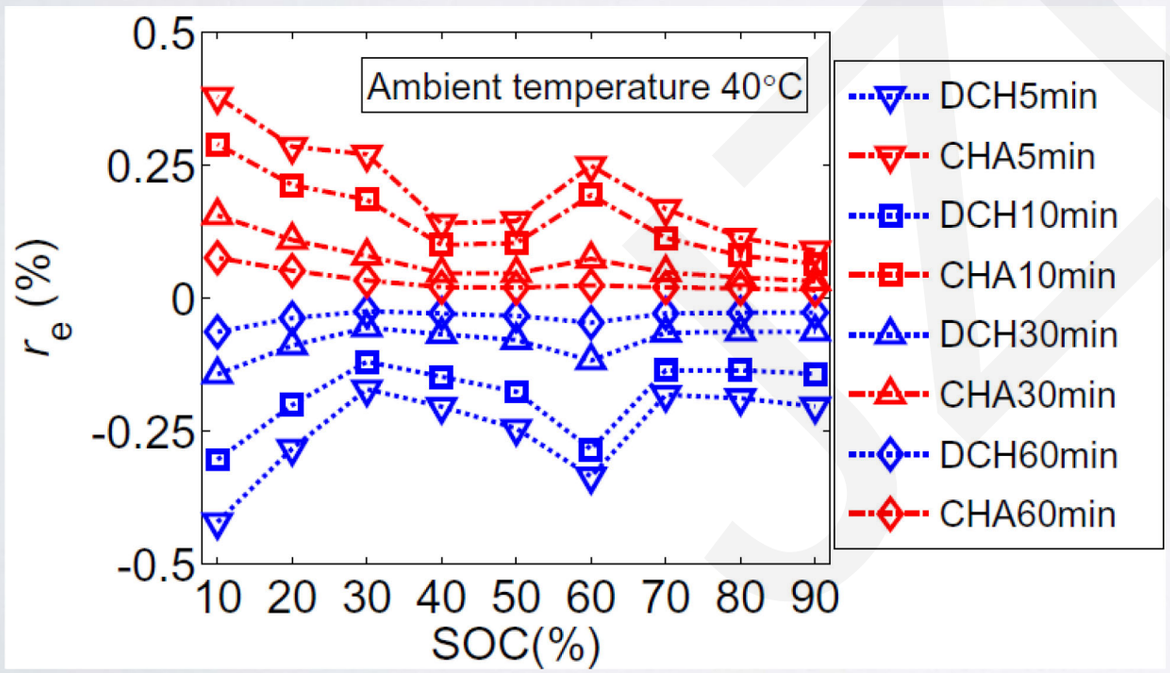

$$r_e = 100\% \times \left(y_t - y_{2h}\right) / y_{2h}$$

Where

r_e denotes the relative error voltage of OCV measurements.

y_t denotes OCV measurements at different relaxation periods.

y_{2h} denotes the measurement value at the 2-h relaxation period.

Results for SOC Estimation

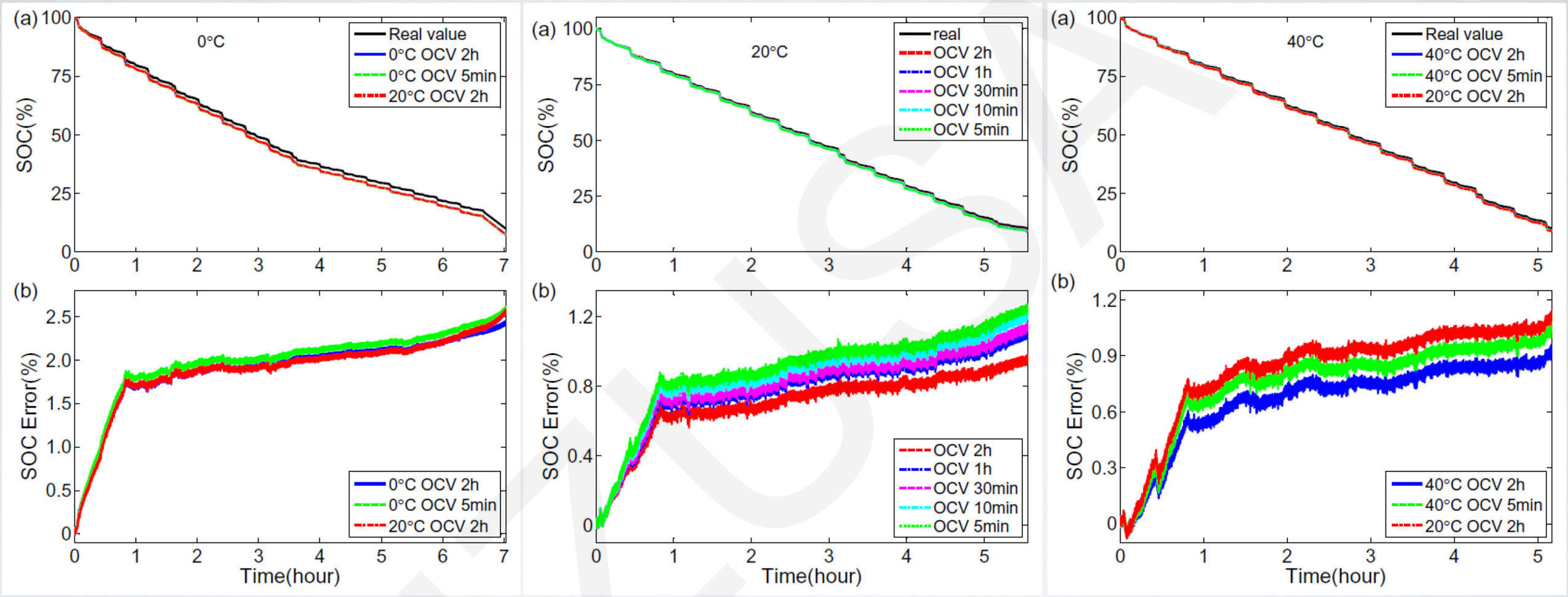

Estimated SOC and errors impacted by different temperature OCVs for battery FTP profiles at 0°/20°/40°C: (a) real and estimated SOC curves; (b) SOC estimation errors.

Conclusions

- Using the OCV-based SOC estimation method, different relaxation times were required to get SOC estimation errors less than 5% at 0°C, 5 min for the discharging process, and 10 min for the charging process. Less errors, higher temperature.
- The proposed adaptive algorithm shows that the SOC estimation accuracy improves as the OCV relaxation periods increase and that the SOC estimation errors can be reduced compared to the OCV-based SOC estimation.
- Under the FTP profiles, the model-based SOC estimation errors can show less than 3% even if the OCV test time is reduced down to a 5-min relaxation period for the SOC-OCV relationships at the experimental temperatures.