Journal of Zhejiang University-SCIENCE A (Applied Physics & Engineering)

Comparison of different cellular structures for the design of selective laser melting parts through the application of a new lightweight parametric optimisation method

Rubén PAZ[†‡1], Mario D. MONZÓN[1], Philippe BERTRAND[2], Alexey SOVA[2]

[1]*Universidad de Las Palmas de Gran Canaria, Departamento de Ingeniería Mecánica, Las Palmas de Gran Canaria, 35017, Spain*
[2]*University of Lyon, ENISE, LTDS CNRS UMR 5513, 58 rue Jean Parot, 42023 Saint-Etienne, France*
[†]E-mail: ruben.paz@ulpgc.es

Key words: Parametric Optimization; Cellular Structures; Selective Laser Melting; Finite Element Analysis; Design of Experiments, Refinement

Cite this as: Rubén Paz, Mario D. Monzón, Philippe Bertrand, Alexey Sova, 2019. Comparison of different cellular structures for the design of selective laser melting parts through the application of a new lightweight parametric optimisation method. *Journal of Zhejiang University-SCIENCE A (Applied Physics & Engineering)*, 20(2):117-132.
https://doi.org/10.1631/jzus.A1800422

1. Introduction

Design capabilities of AM technologies

- Taking into account the capabilities of Additive Manufacturing technologies to create internal structures, the possibilities of these technologies regarding lightweight optimisation have become an interesting challenge for AM users.

Parametric optimisation of cellular structures for lightweighted SLM parts

- This work is focused on the application and optimisation of cellular structures to design lightened parts for Selective Laser Melting (SLM) technology.
- Topology optimisation (available in most Finite Element Method software) can achieve better results than parametric optimisation, but it may lead to geometries that cannot be manufactured by SLM (hanging geometries).
- This paper combines CAD, FEM and parametric optimisation to accomplish a lightweight parametric optimisation.
- With the correct parameterisation of the design variables and intervals, the methodology will lead to designs that can actually overcame any manufacturing constraints.

2. Methods

CAD strategy to define the internal structure and external surface

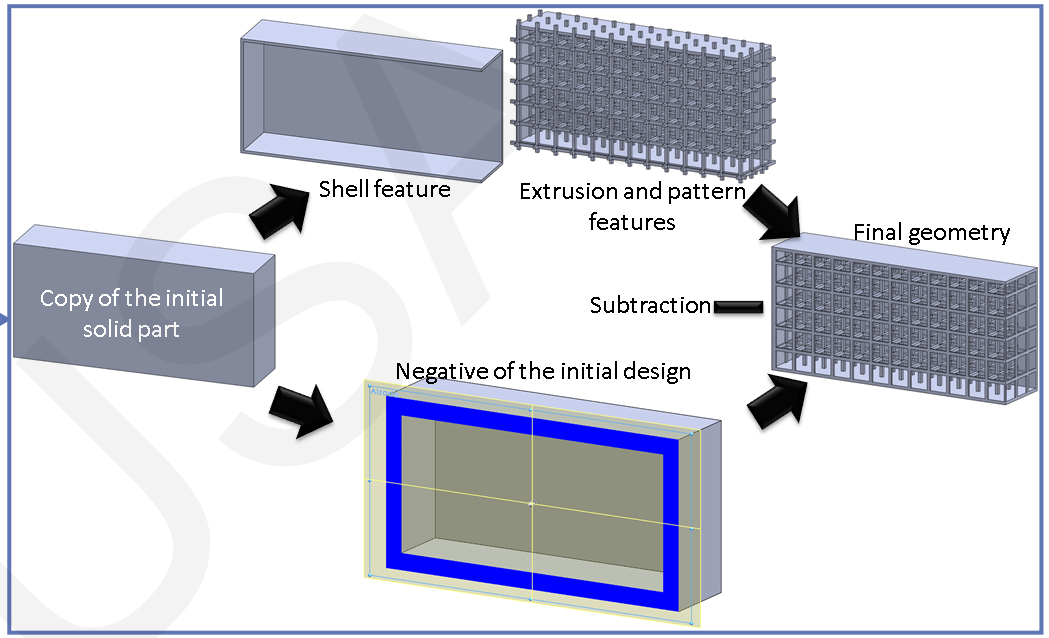

6 cell geometries evaluated

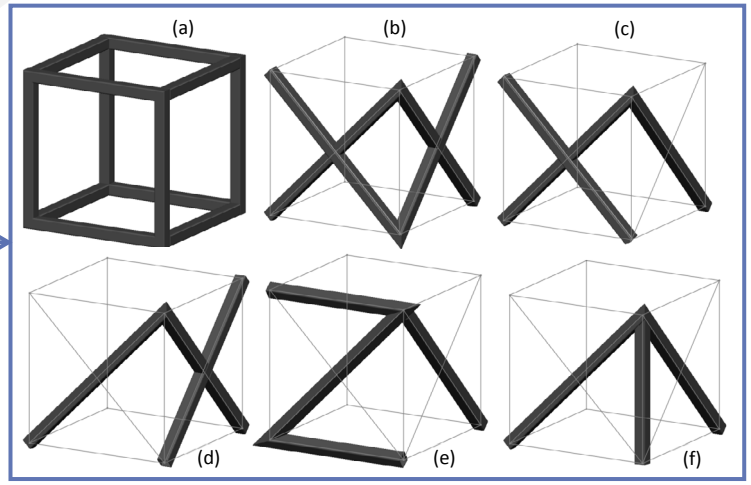

2. Methods

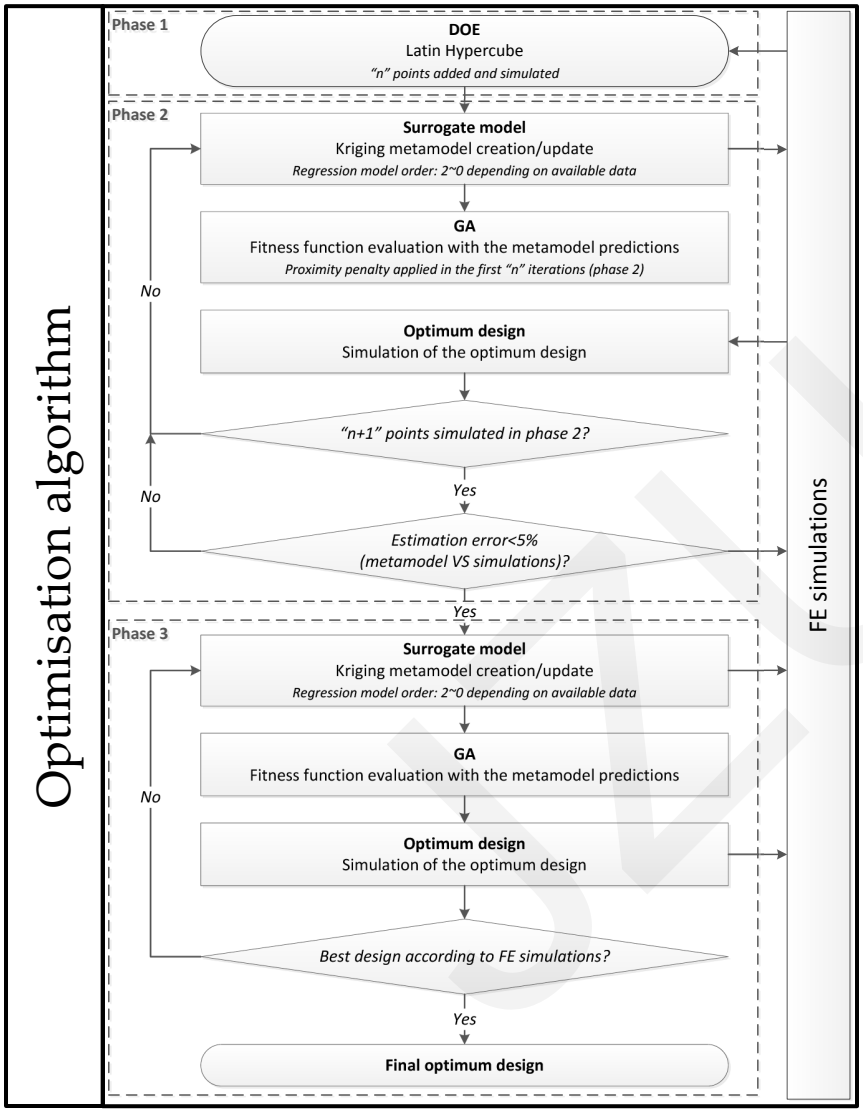
Optimisation algorithm
Phase 1
DOE
Latin Hypercube
"n" points added and simulated
Phase 2
Surrogate model
Kriging metamodel creation/update
Regression model order: 2~0 depending on available data
GA
Fitness function evaluation with the metamodel predictions
Proximity penalty applied in the first "n" iterations (phase 2)
Optimum design
Simulation of the optimum design
"n+1" points simulated in phase 2?
No
Yes
Estimation error<5% (metamodel VS simulations)?
No
Yes
Phase 3
Surrogate model
Kriging metamodel creation/update
Regression model order: 2~0 depending on available data
GA
Fitness function evaluation with the metamodel predictions
Optimum design
Simulation of the optimum design
Best design according to FE simulations?
No
Yes
Final optimum design
FE simulations

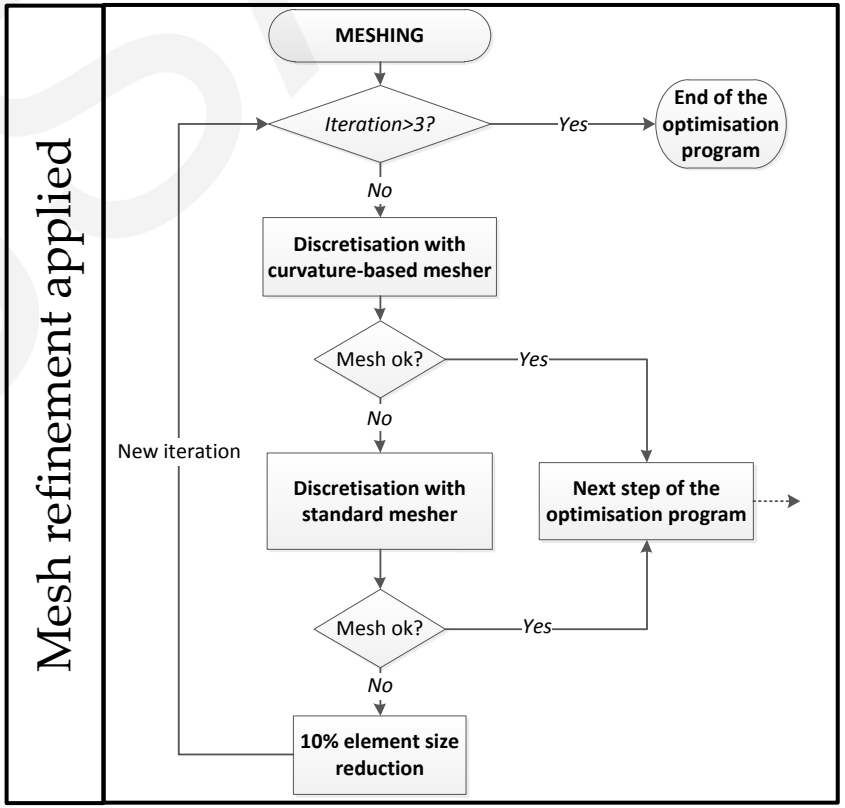
Mesh refinement applied
MESHING
Iteration>3?
Yes
End of the optimisation program
No
Discretisation with curvature-based mesher
Mesh ok?
Yes
No
New iteration
Discretisation with standard mesher
Next step of the optimisation program
Mesh ok?
Yes
No
10% element size reduction

2. Methods

Optimisation of the 7 proposed geometries

- The 7 parameterised geometries were optimised with the developed algorithm to minimise the weight and keep the stiffness higher than 43% of the solid geometry. Cells 1-6 had 3 design variables, while "cell 1 reinforced" had 6 design variables.

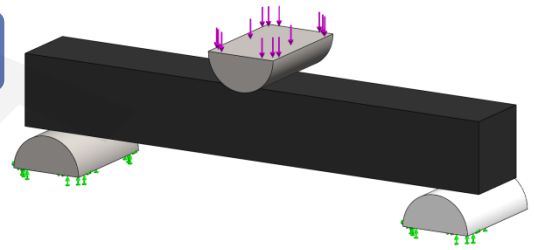

Comparison of cell patterns and manufacturing of the optimums

- Figure on the left (bottom) shows the weight and optimisation time compared with a reference value.
- Figure on the right (bottom) shows the optimised parts manufactured by SLM for the 7 parameterised geometries.

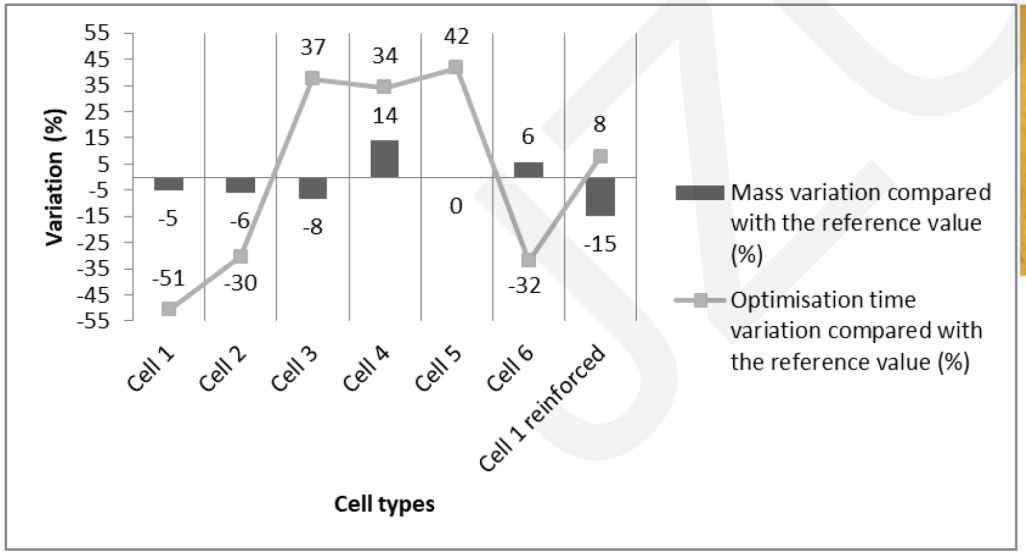

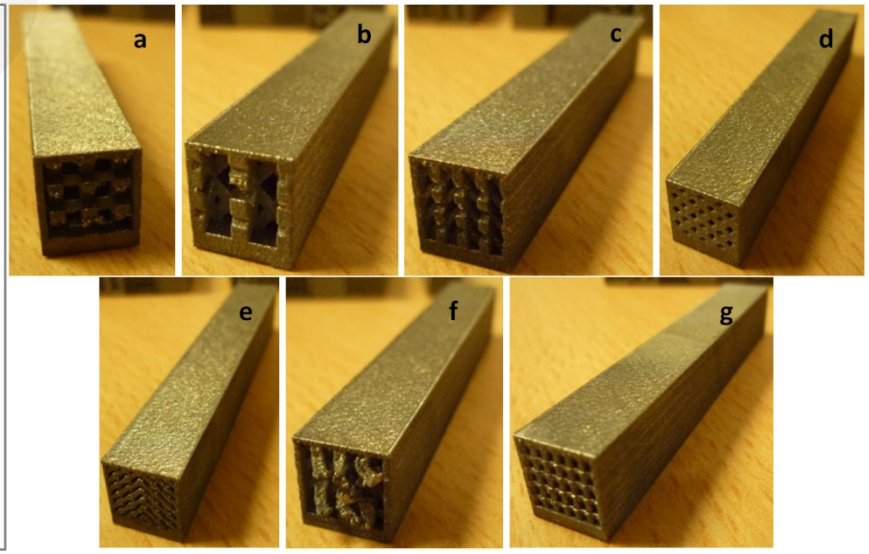

3. Results

Flexural tests

- The SLM parts were tested under flexural load and the results are summarized in the following figure.
- The specific stiffness (compared with the average value) was calculated for the real and simulated results.

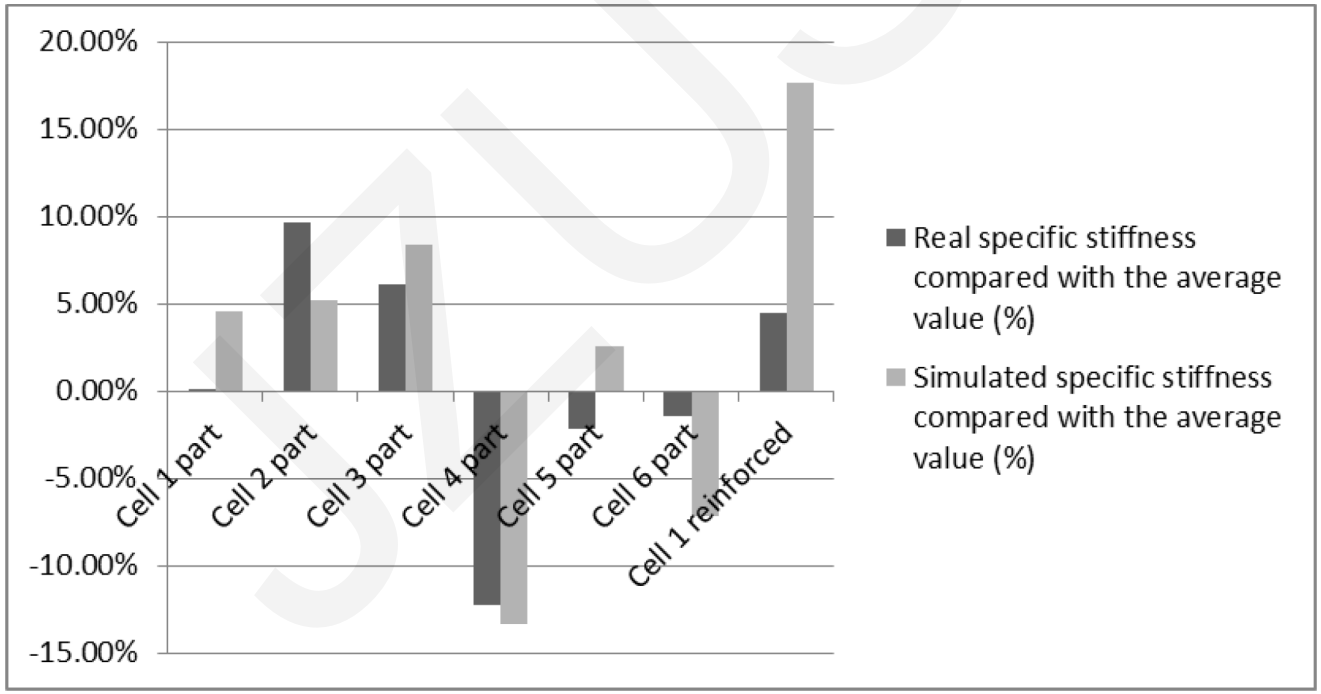

4. Discussion

Hanging areas and loss of mechanical properties

- Differences were found between the FE simulations and the real results, may be caused by manufacturing imperfections.
- The accuracy of the FE model is highly dependent on the strut geometry and cross-sectional radius of the final part. Therefore, good correlation between simulated and real results is difficult to achieve in 3D printed parts.
- Simulations overestimated the results mainly for cell 1, cell 5 and cell 1 reinforced (precisely the ones with horizontal hanging structures). This may be caused by the more difficult manufacturing conditions in the first layer of each horizontal bar (sintered without a complete solid base in the hanging areas, figure on the left).
- It was demonstrated that there was a correlation between the loss of specific stiffness (simulations-experimental results) and the horizontal hanging areas (figure on the right).

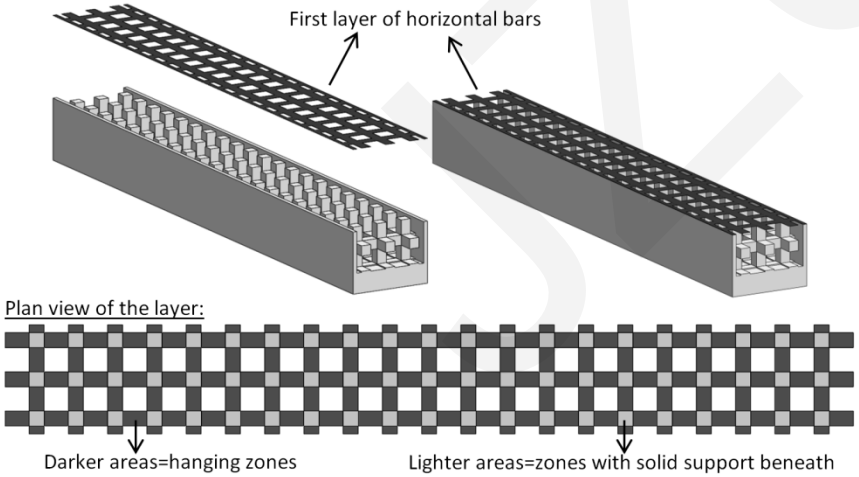

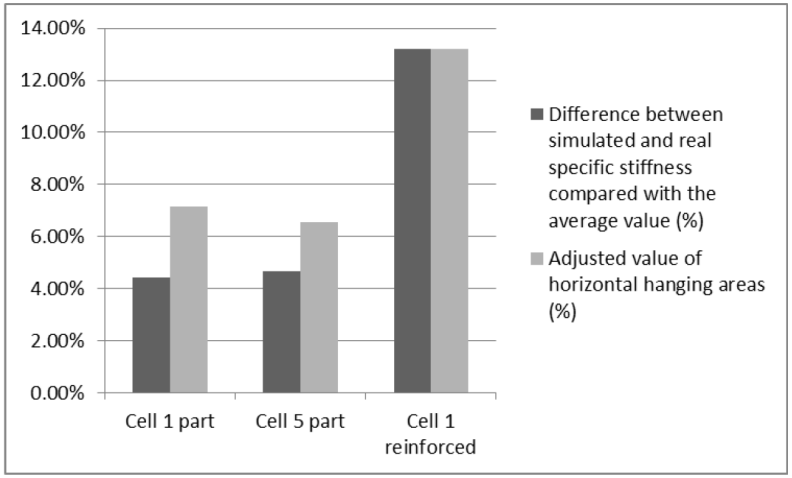

5. Conclusions

Optimisation algorithm suitable for SLM parts

- The optimisation algorithm has been tested and overcomes the limitation related to the lightweight optimisation of SLM parts.

Cubic cell pattern has some advantages

- The cubic cell pattern has some advantages in terms of CAD definition, parameterisation and optimisation time (due to the simplicity of the geometry) and the quality of the optimums is close to the best achieved with other complex cells.

- However, cubic cell structures have horizontal bars (hanging structures), which cause a loss of mechanical properties compared with the estimates of the finite element analysis.

Cubic cellular structures with user-defined reinforcements

- The combination of cubic cellular structures with user-defined and parameterised reinforcements allows the achievement of more efficient designs (higher specific stiffness) but it also involves longer optimization times derived from the use of more design variables.