Journal of Zhejiang University-SCIENCE A (Applied Physics & Engineering)

Cite this as: Qi Song, Jing-peng Zhang, Zhen Zhao, Jie-lin Luo, Qin Wang, Guang-ming Chen, 2019. Development of natural gas liquefaction processes using mixed refrigerants: a review of featured process configurations and performance. *Journal of Zhejiang University-SCIENCE A (Applied Physics & Engineering)*, 20(10):727-780. https://doi.org/10.1631/jzus.A1900143

Development of natural gas liquefaction processes using mixed refrigerants: a review of featured process configurations and performance

Qi SONG, Jing-peng ZHANG, Zhen ZHAO, Jie-lin LUO, Qin WANG*, Guang-ming CHEN

*Corresponding author: wangqin@zju.edu.cn

Key words: Natural gas; Liquefaction; Mixed refrigerant; Configuration; Performance

Highlights

1

Classification
of natural gas liquefaction processes using mixed refrigerants (MR-NGLPs)

2

Elaboration
of featured configurations, refrigerants and operation parameters

3

Summaries & comparisons
of specific power consumption (SPC) value

4

Effect
of cycle cascade, component separation and expansion method on performance

ZJUSA

Proposed classification framework

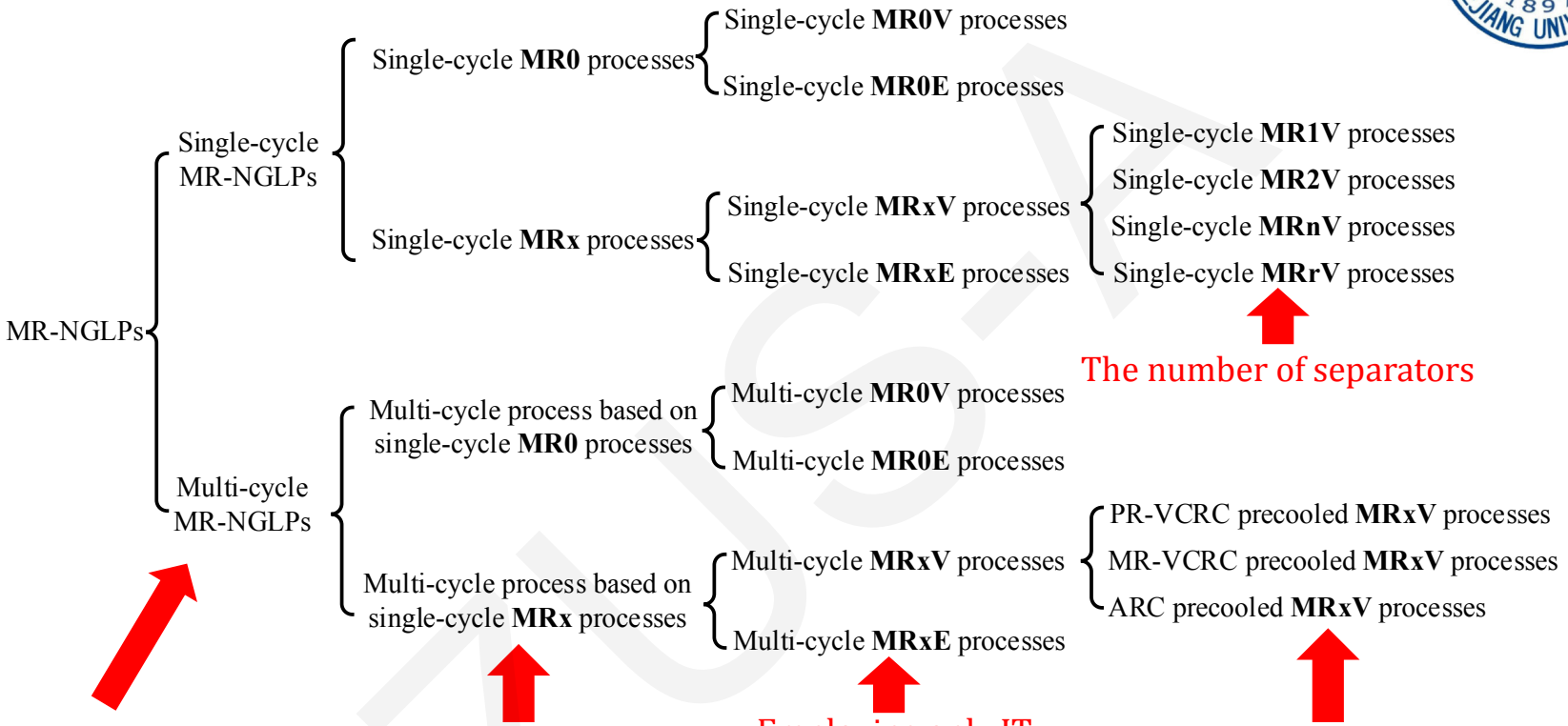

x: the number of MR component separations
0: the absence of MR component separation
V: involving only JT expansion (namely employing JT expansion units such as expansion valves and capillary tubes)
E: involving other types of expansion rather than only JT expansion (namely employing non-JT expan-sion units such as expanders, vortex tubes and ejectors, as well as combinations of JT and non-JT expansion units)

Single-cycle MR-NGLPs

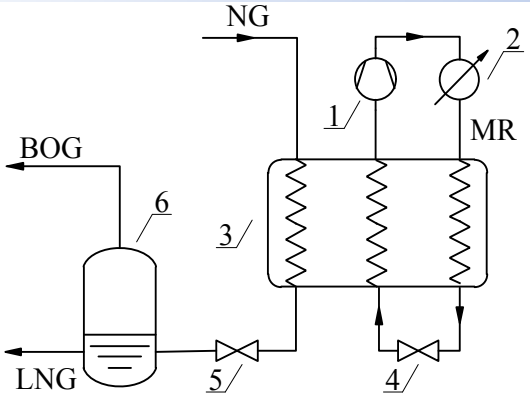

Fig. 1 A **single-cycle MR0V** process, adapted from [1]: (1) compressor; (2) condenser; (3) HEX; (4, 5) expansion valve; (6) storage tank

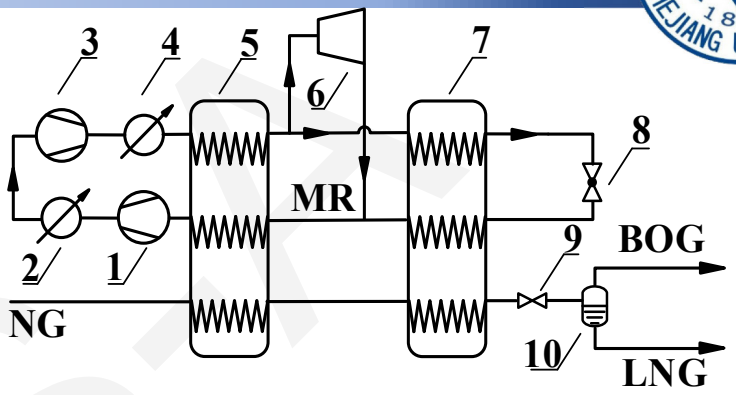

Fig. 2 A **single-cycle MR0E** process adapted from [2]: (1, 3) compressors; (2, 4) condensers; (5, 7) HEXs; (6) expander; (8, 9) expansion valves; (10) NG separator.

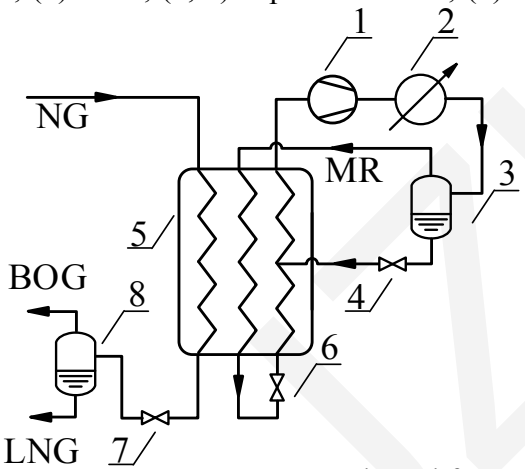

Fig. 3 A **single-cycle MR1V** process adapted from [3]: (1) compressor; (2) condenser; (3) MR separator; (4, 6, 7) expansion valves; (5) HEX; (8) storage tank

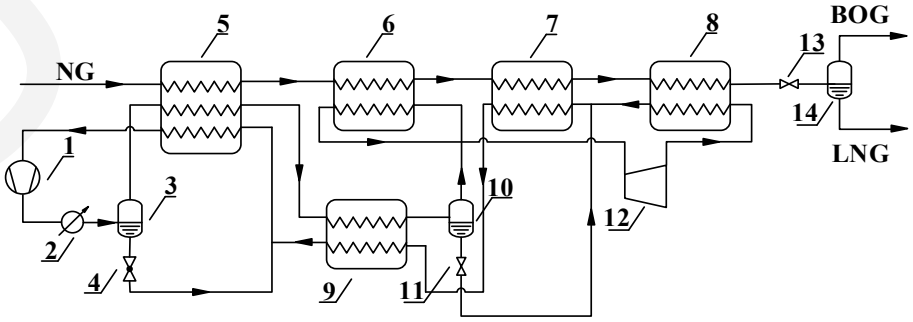

Fig. 4 A **single-cycle MR1E** process adapted from [4]: (1) compressor; (2) condenser; (3, 10) MR separators; (4, 11, 13) expansion valves; (5, 6, 7, 8, 9) HEXs; (12) expander; (14) NG separator

[1] Maher, J.B., Sudduth, J.W., (1975) US Patent 3914949
[2] Cao, W., Lu, X., Lin, W., et al., (2006) *Appl. Therm. Eng.,* **26**(8-9): 898-904.
[3] Coers, D.H., Sudduth, J.W., (1976) US Patent 3932154.
[4] Baek, S., Hwang, G., Jeong, S., (2010) In: Weisend II, J. R. (Eds.), Advances in Cryogenic Engineering 55. p.1113-1120.

Multi-cycle MR-NGLPs

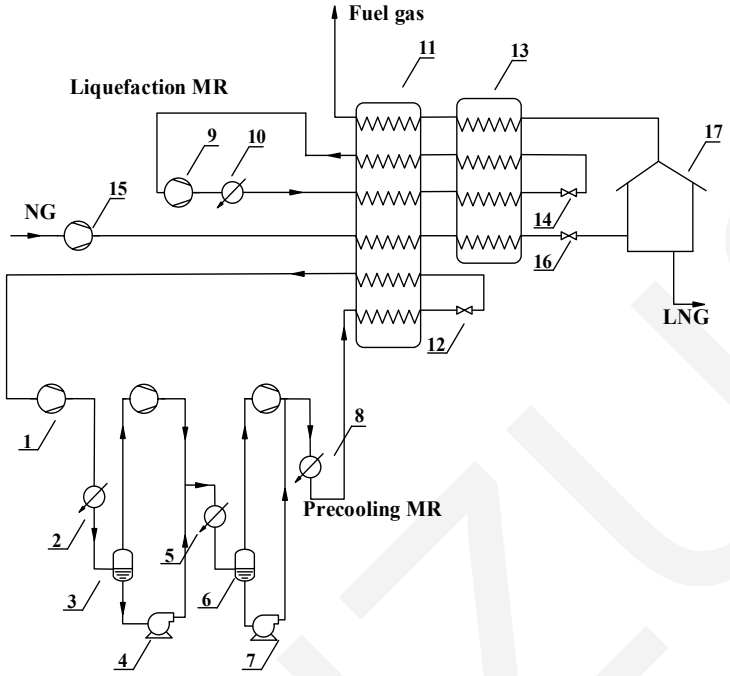

Fig. 5 A **multi-cycle MR0V** process adapted from [5]: (1, 9, 15) compressors; (2, 5, 8, 10) condensers; (3, 6) MR separa-tors; (4, 7) pumps; (11, 13) HEXs; (12, 14, 16) expansion valves; (17) storage tank

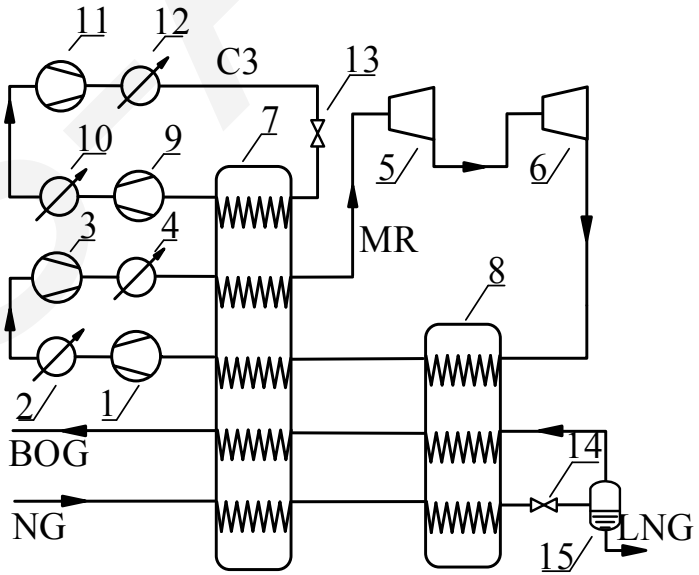

Fig. 6 A **multi-cycle MR0E** process adapted from [6]: (1, 3, 9, 11) compressors; (2, 4, 10, 12) con-densers; (5, 6) expanders; (7, 8) HEXs; (13, 14) expan-sion valves; (15) NG separator. Reprinted from (Ding et al., 2016)

[5] Shell Internationale Maatschappij N.V., (1962) GB Patent 895094
[6] Ding, H., Sun, H., He, M., (2016) *Appl. Therm. Eng.*, **93**: 1053-1060.

Multi-cycle MR-NGLPs

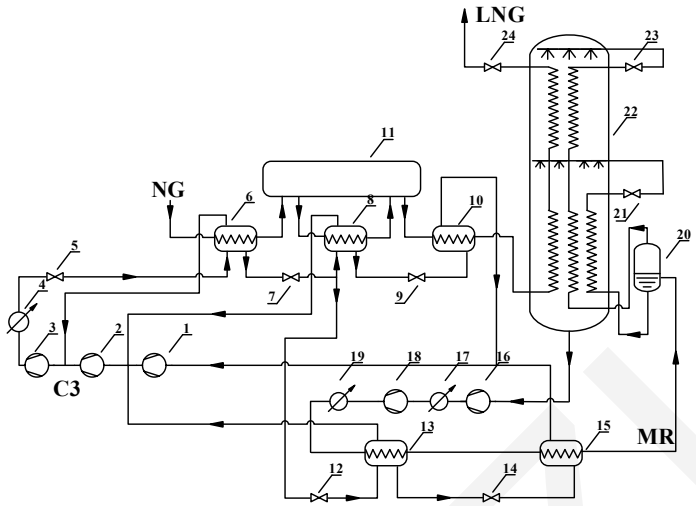

Fig. 7 A **multi-cycle MR1V** process adapted from [7]: (1, 2, 3, 16, 18) com-pressors; (4, 17, 19) condensers; (5, 7, 9, 12, 14, 21, 23, 24) expansion valves; (6, 8, 10, 13, 15, 22) HEXs; (11) NG treatment units; (20) MR separator

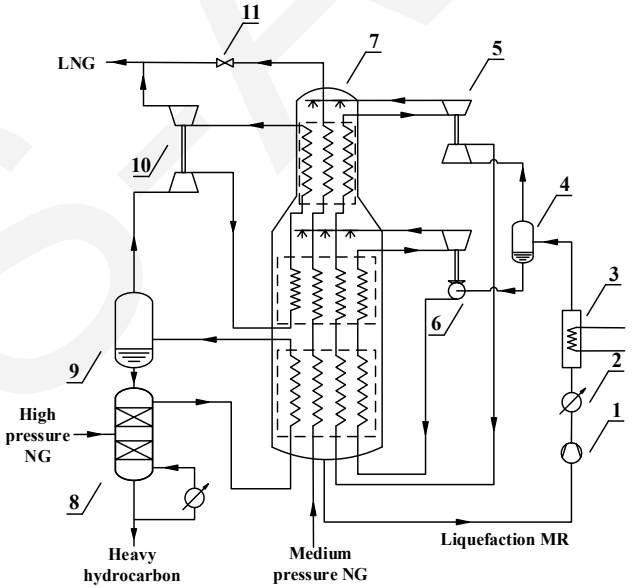

Fig. 8 A **multi-cycle MR1E** process adapted from [8]: (1) liquefaction stage com-pressor; (2) liquefaction stage condenser; (3) precooling stage evaporator; (4) liquefaction stage MR separator; (5, 6, 10) expanders linked with the compressor or pump; (7) HEX; (8) NG scrub column; (9) NG separator; (11) expansion

[7] Gaumer Jr., L.S., Newton, C.L., (1973) US Patent 3763658
[8] Herron, D.M., Chatterjee, N., (1990) US Patent 4970867.

Current summary

1. MR components and composition varied among different MR-NGLP configurations. (suggestions listed in manuscript)

2. The separation units can change the MR composition, thus providing extra DOFs for optimization and improvement. The tabulated SPCs of MRx processes were usually lower than those of MR0 processes, indicating the efficiency advantage of MR separation.

3. Expanders had an advantage of less irreversibility than expansion valves, but processes with expanders have been much less studied and were less competitive than those with expansion valves in terms of SPCs. The use of other non-JT expansion units was rarely reported, which deserved more attention.

4. The coupling of precooling or subcooling was beneficial in reducing SPC at a constant production rate or at increased LNG production with a given power, by decreasing the exergy loss at the hot or cold ends of the HEXs.

5. The addition of separation units and coupled precooling/subcooling stages would inevitably increase the complexity and cost. Therefore, the production scale, the SPC level and the cost should all be taken into consideration in process selection.

ZJU-A

Potential developments

1. The search for the optimum MR composition in different configurations remains important and necessary. The composition ranges listed in Tables 1-8 can help determine the composition boundaries in future optimizations.

2. The use of multiple separation or rectification of MRs is effective in avoiding oil block when oil-lubricated compressors are used, which is an option worth considering, especially in small-scale applications.

3. JT expansion units have been more widely used than non-JT ones. From a thermodynamic point of view, the efficiency advantage of non-JT expansion units, especially expanders, has not been fully exploited. With the development of cryogenic fluid equipment, hydraulic turbines seem to be a promising choice in the two phase expansion of conventional N2-HC mixtures in MR0E or MRxE processes.

4. Precooling and subcooling, as conventional methods, are still effective for performance improvement of MR-NGLPs. In particular, precool-ing is a dominant solution for reducing the exergy loss at the hot end of the heat exchanger. Thus, it is possible to construct new multi-cycle processes with better thermodynamic performances on the basis of various single-cycle schemes.

5. Most published theoretical and experimental studies emphasize minimizing indicators related to power consumption, such as total or specific power consumption. it is also meaningful to consider other performance indicators in future optimizations, such as exergy related parameters and economy related indexes.