Journal of Zhejiang University-SCIENCE A

Cite this as: Zhe-ming Tong, Shuang-shuang Wu, Shui-guang Tong, Yu-qing Yue, Yuan-song Li, Zheng-yu Xu, Yu-wei Zhong, 2020. Energy-saving technologies for construction machinery: a review of electro-hydraulic pump-valve coordinated system. *Journal of Zhejiang University-SCIENCE A (Applied Physics & Engi-neering)*, 21(5):331-349.
https://doi.org/10.1631/jzus.A2000094

Energy-saving technologies for construction machinery: a review of electro-hydraulic pump-valve coordinated system



Key words: Construction machinery; Energy saving; Pump-valve coordinated systems; Control algorithm; Hydraulic systems

Framework of the article

This review summarizes the recent research progress in energy-saving technologies based on pump-valve coordinated systems:

- **Hydraulic systems in different categories of construction machinery**
- **Control methods of the electro-hydraulic system**
- **Hydraulic hybrid energy regeneration systems and key components**

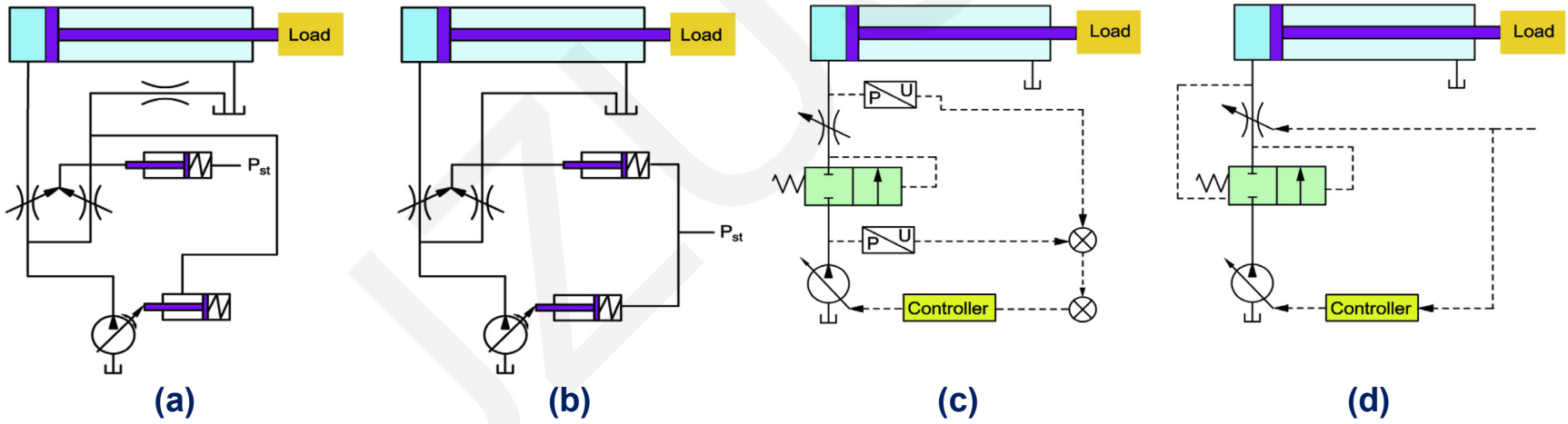

Fig. 1 Typical hydraulic systems used in construction machinery. (a) Negative flow control; (b) Positive flow control; (c) Electro-hydraulic LS; (d) Electro-hydraulic flow matching

Hydraulic systems in different construction machinery

Independent metering systems decouple the inlet and outlet of the actuator through independent valves. Load sensing control achieves system flow supply and demand balance through pressure margin closed-loop control. The secondary regulation realizes energy recovery and reuse of recovered energy through the hydraulic accumulator and constant pressure network.

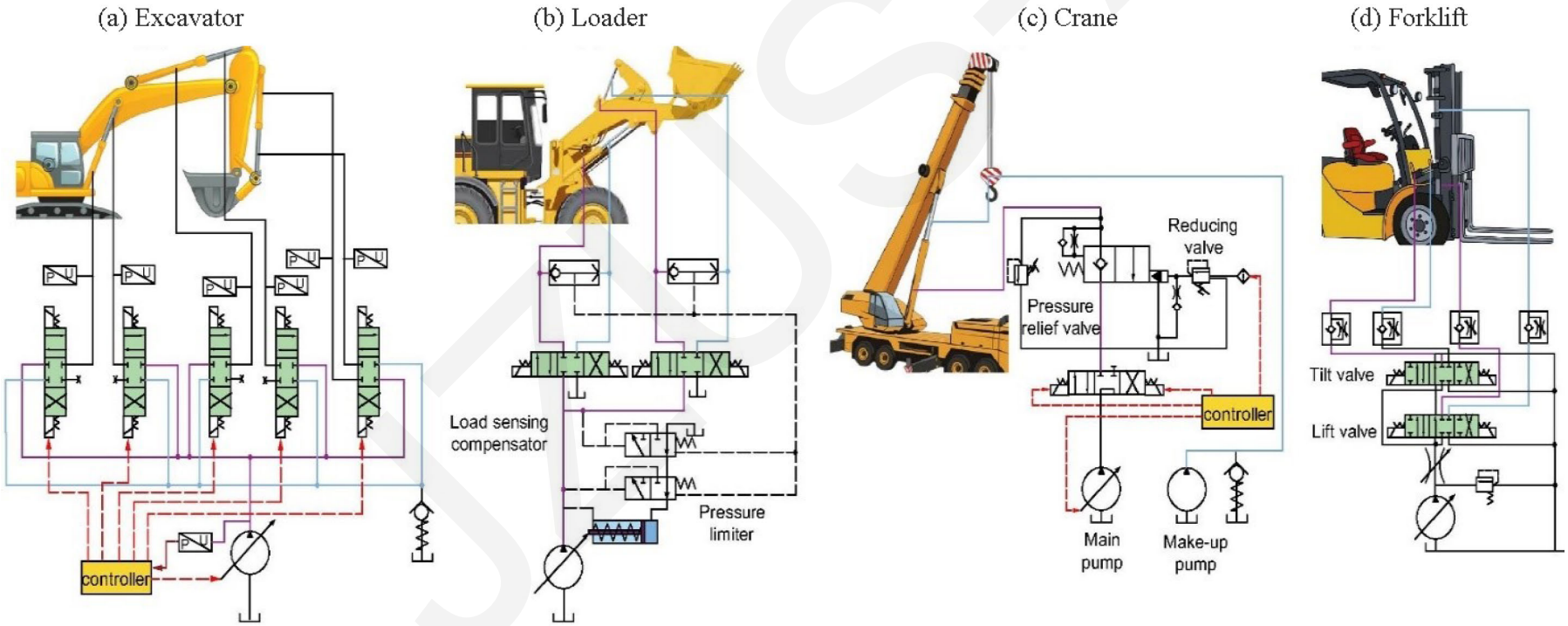

Fig. 2 Typical hydraulic schemes in common construction machinery. (a) Independent metering control in excavators; (b) Load-sensing scheme in loaders; (c) Make-up pump scheme in cranes; (d) Coordinated control in forklifts

Control methods of the electro-hydraulic system

Table 1 Typical control strategies for electro-hydraulic actuators

Control methods	Research trends	Sample of studies
PID control	Parameter optimization and structural design	1 Incomplete derivative PID 2 Variable speed integral algorithm 3 Integral separation PID
	Combined with other control methods	1 PID with optimization algorithm 2 Adaptive PID
Adaptive control	Adaptive control integrating other control methods	1 Adaptive feedforward 2 Nonlinear adaptive control
Robust control	Robust control method based on norm theory and μ-value synthesis	1 H_∞ control for unstructured uncertainty system 2 μ-value synthesis for dead-zone
	Adaptive robust control for changing the structure or parameters of the controller	1 Adaptive robust algorithm for unmodeled disturbances 2 Unknown valve dead-zone
Sliding Mode control	Control strategies for controller flutter	1 Reaching law 2 Filter method 3 Boundary layer methods based SM control
	SM control incorporated with other intelligent control algorithms	1 Terminal SM 2 Discrete-time SM 3 Robust SM control based on optimization algorithm
Backstepping control	Backstepping control combined with uncertainty compensation	1 Barrier Lyapunov function 2 State-observer-based control robust backstepping control

Hydraulic hybrid energy regeneration systems

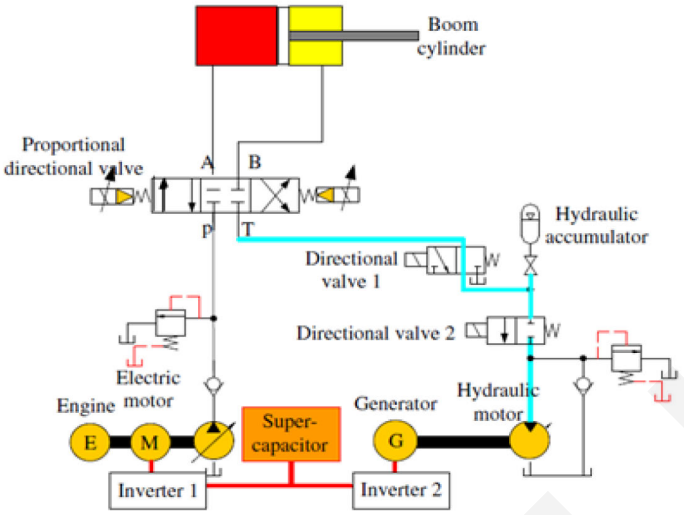

Fig. 3 Schematic of the accumulator-motor-generator energy regeneration system. Reprinted from ref. (Lin, et al., 2016), Copyright 2016, with permission from Elsevier

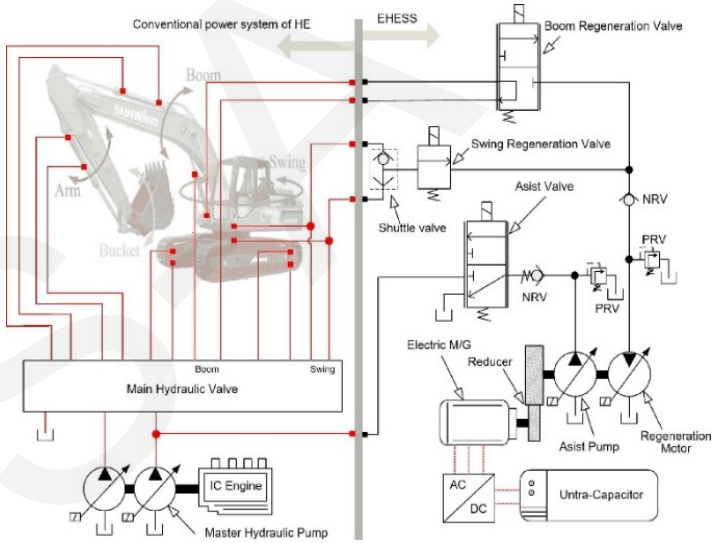

Fig. 4 Hybrid gravitational and braking energy regeneration. Reprinted from ref. (Gong et al., 2019), Copyright 2019, with permission from Elsevier

Lin T, Huang W, Ren H, et al., 2016. New compound energy regeneration system and control strategy for hybrid hydraulic excavators. Automation in Construction, 68:11-20. https://doi.org/10.1016/j.autcon.2016.03.016

Gong J, Zhang D, Guo Y, et al., 2019. Power control strategy and performance evaluation of a novel electro-hydraulic energy-saving system. Applied Energy, 233-234:724-734. https://doi.org/10.1016/j.apenergy.2018.10.066

Acknowledgements

This project was supported by the Zhejiang Provincial Natural Science Foundation of China (No. LR19E050002), the National Key R&D Program of China (No. 2019YFB2004604), the National Natural Science Foundation of China (No. 51821093 and 51708493), the Key R&D Program of Zhejiang Province (Nos. 2018C01020 and 2018C01060), and the Youth Funds of the State Key Laboratory of Fluid Power and Mechatronic Systems (No. SKLoFP_QN_1804), China..