Journal of Zhejiang University-SCIENCE A (Applied Physics & Engineering)

Flow control characteristics of the digital and mechanical redundancy control electric modulation valve

He LIU, Bin ZHAO, Bo WANG, Long QUAN,
Yun-xiao HAO, Yun-wei LI

Cite this as: He LIU, Bin ZHAO, Bo WANG, Long QUAN, Yun-xiao HAO, Yun-wei LI, 2022. Flow control characteristics of the digital and mechanical redundancy control electric modulation valve. *Journal of Zhejiang University-SCIENCE A (Applied Physics & Engineering)* , 23(8):599-609.
https://doi.org/10.1631/jzus.A2100526

Working principle

- A method of digital and mechanical redundancy control flow is proposed.

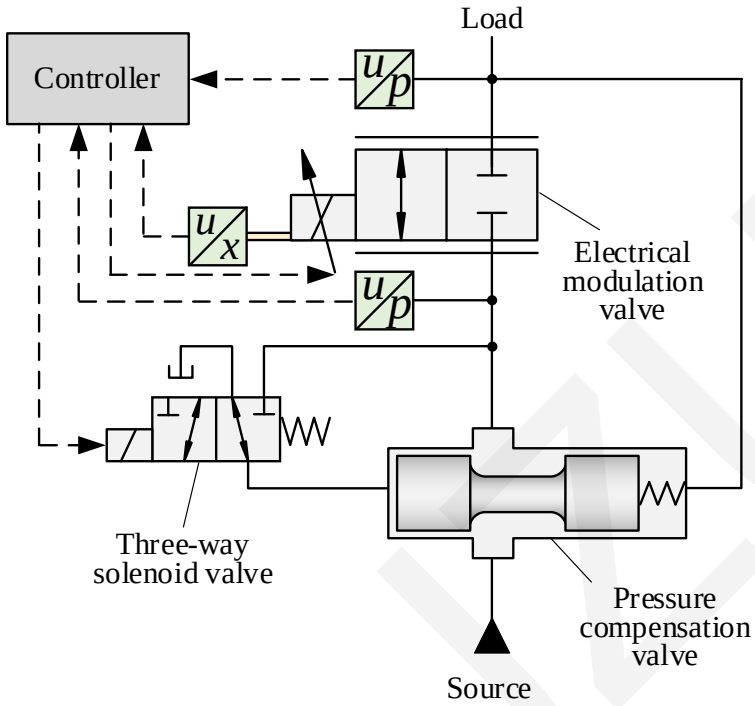

Principle of digital and mechanical redundancy control of the flow of an electric modulation valve

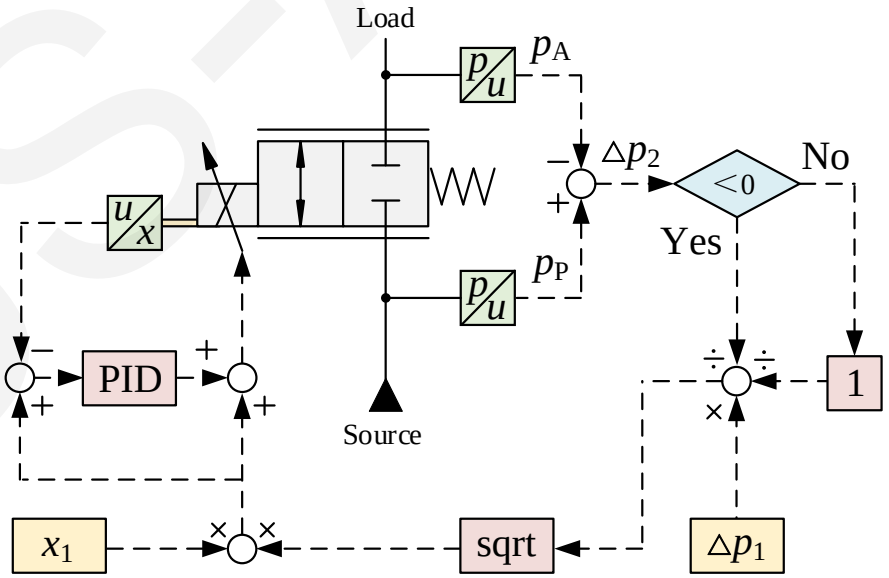

Flow control principle of an electrical modulation valve

Simulation research

- The co-simulation model of the electrical modulation valve is established in the co-simulation software Simulation X.

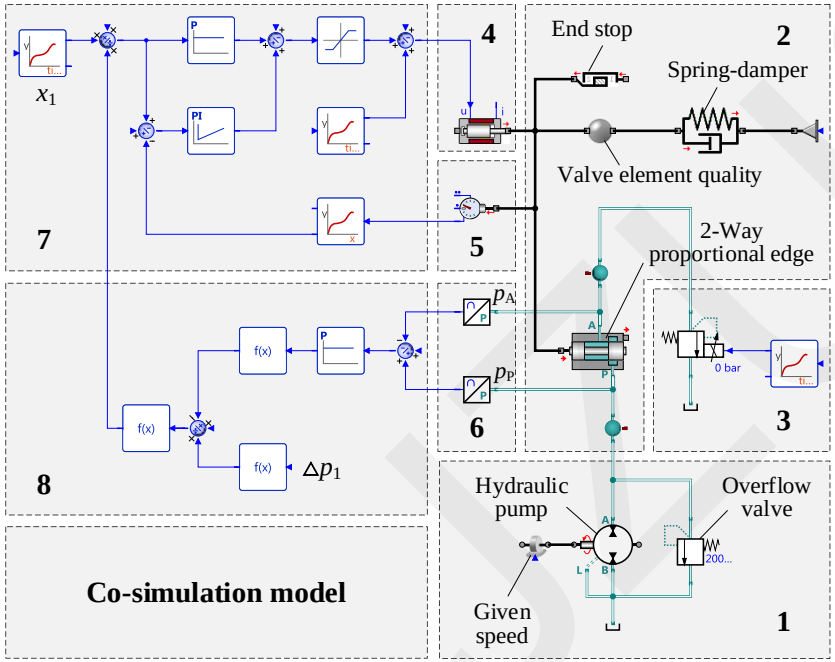

The co-simulation model of the electrical modulation valve

Before the compensation

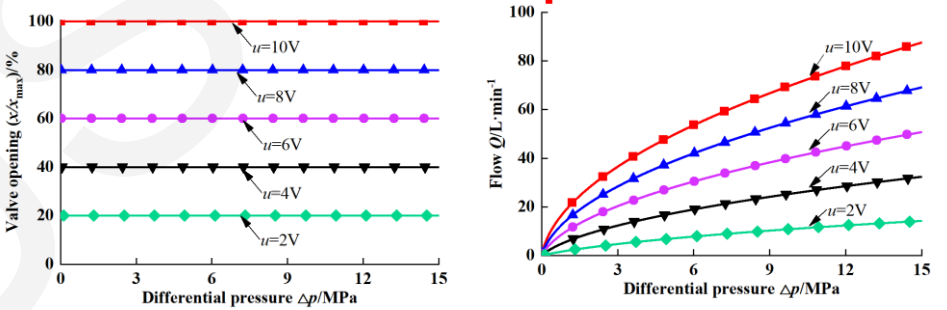

After the compensation

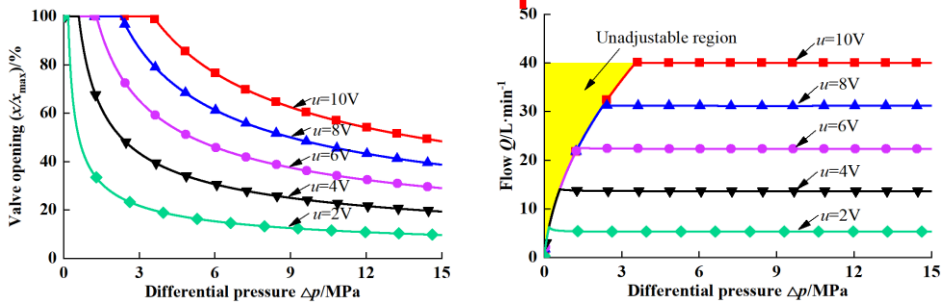

Simulation curve

Test research

- The test research is carried out on the laboratory hydraulic valve test system.

Principle of test system

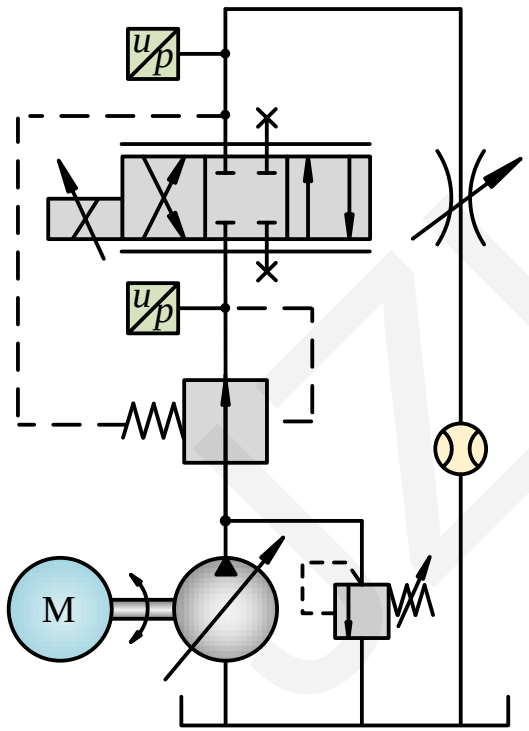

Hydraulic valve bedstand

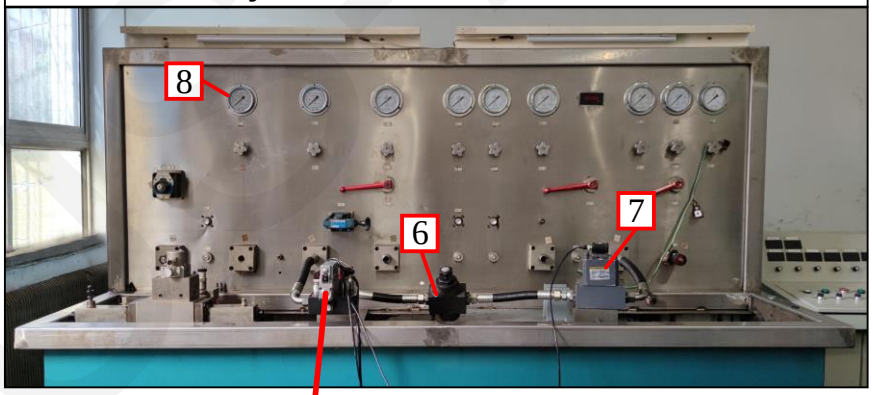

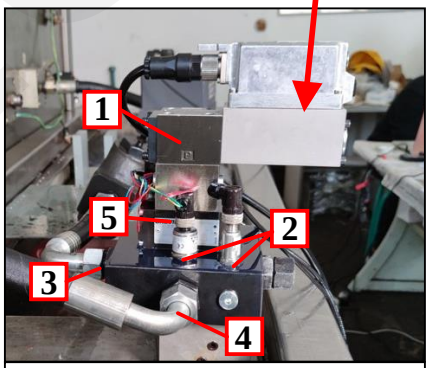

Tested valve

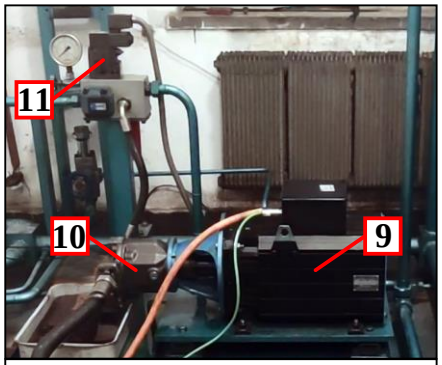

Power unit

Test research

Test curve with pressure compensation valve

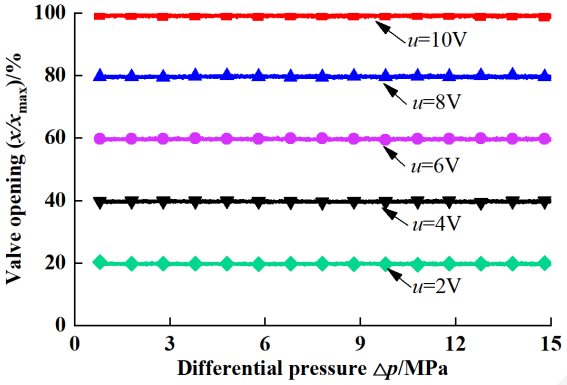

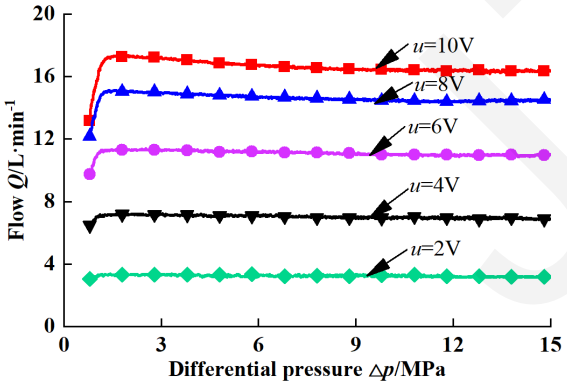

Test curve with digital compensation flow (Δp1 = 3.5 MPa)

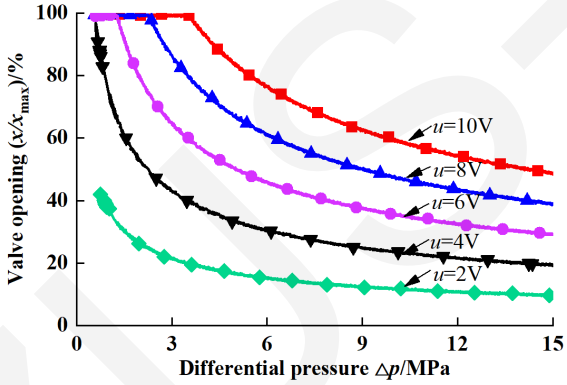

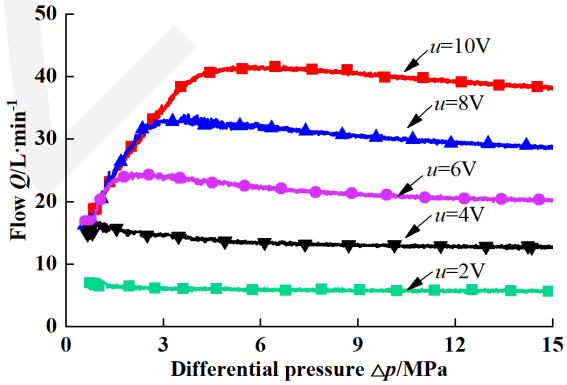

Test curve with digital compensation flow (Δp1 = 0.8 MPa)

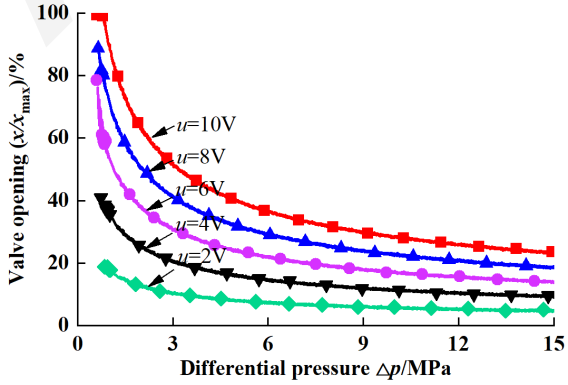

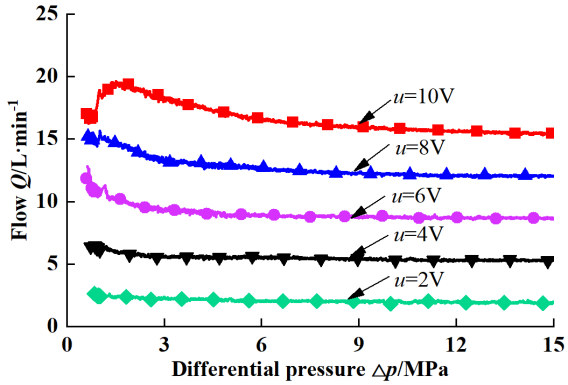

Conclusions

- The research shows that the scheme of digital compensation flow can keep the flow through a valve constant when the pressure difference changes and that the flow control accuracy is high. According to different flow requirements, the parameters can be set in the controller to flexibly adjust the set pressure difference.
- The system can also control the flow under the action of a mechanical pressure compensation valve, achieve the purpose of redundancy control and improve the safety of the system.