Journal of Zhejiang University-SCIENCE A (Applied Physics & Engineering)

Bogie active stability simulation and scale rig test based on frame lateral vibration control

Yadong SONG, Hu LI, Jun CHENG, Yuan YAO

Cite this as: Yadong SONG, Hu LI, Jun CHENG, Yuan YAO, 2023. Bogie active stability simulation and scale rig test based on frame lateral vibration control. *Journal of Zhejiang University-SCIENCE A (Applied Physics & Engineering)*, 24(7):625-636. https://doi.org/10.1631/jzus.A2200127

Article Content Structure

Research object

High speed train bogie system

Simulation analysis

Linear stability analysis, Nonlinear stability analysis …

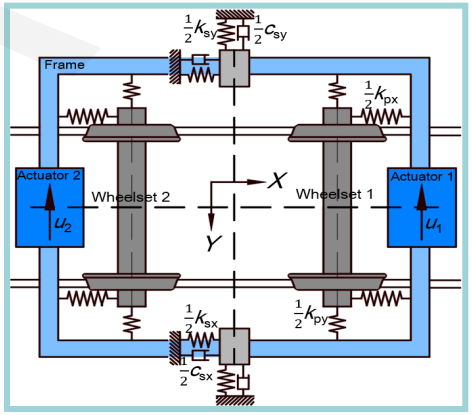

Experimental analysis

Time and frequency domain research, Control parameters and time delay research …



Simulation Model

- The bogie dynamics model with lateral vibration control

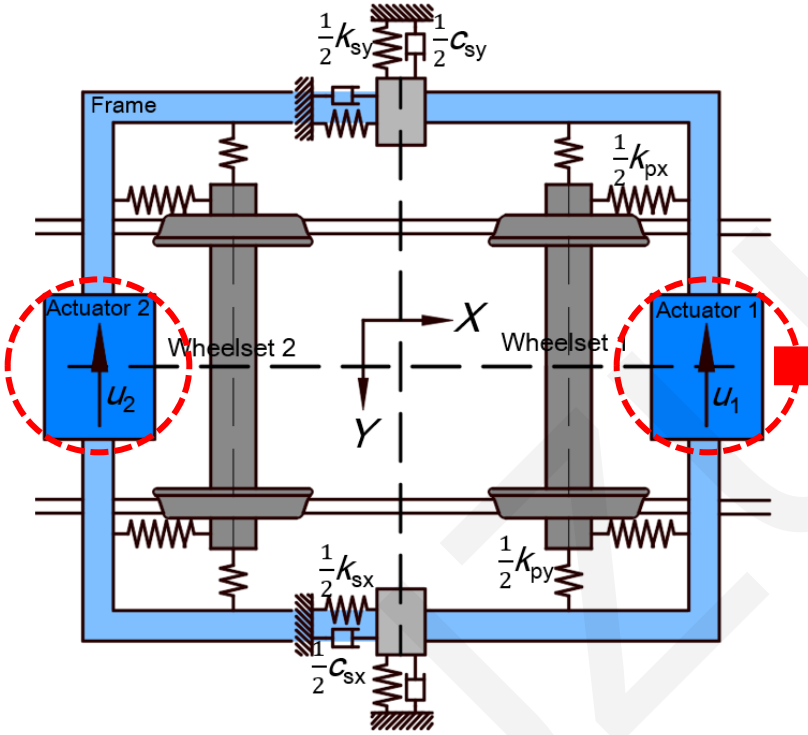

Fig. 1. Bogie dynamics model.

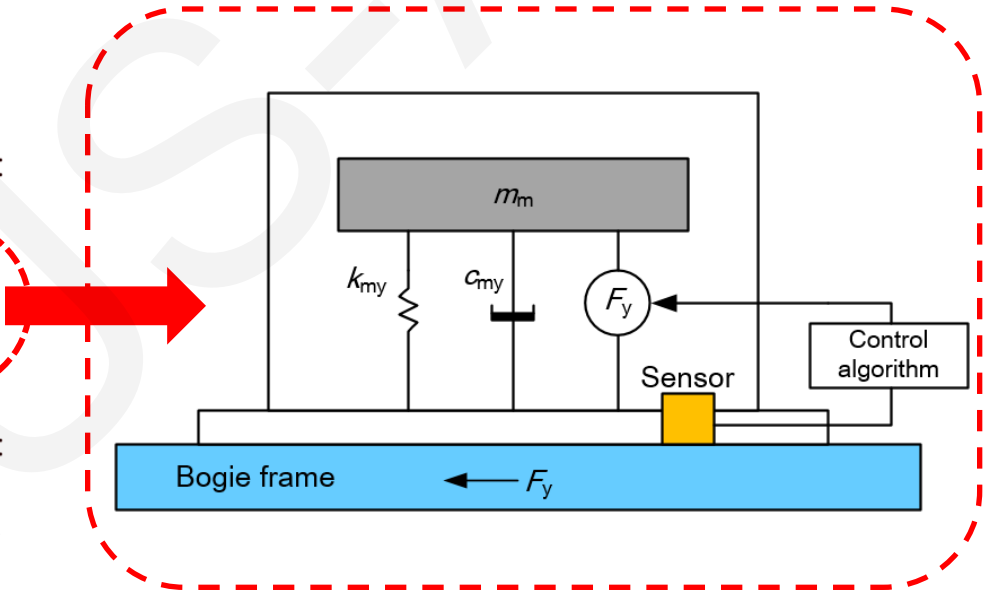

Fig. 2. Inertial actuator dynamics model.

Simulation Analysis

Linear stability analysis

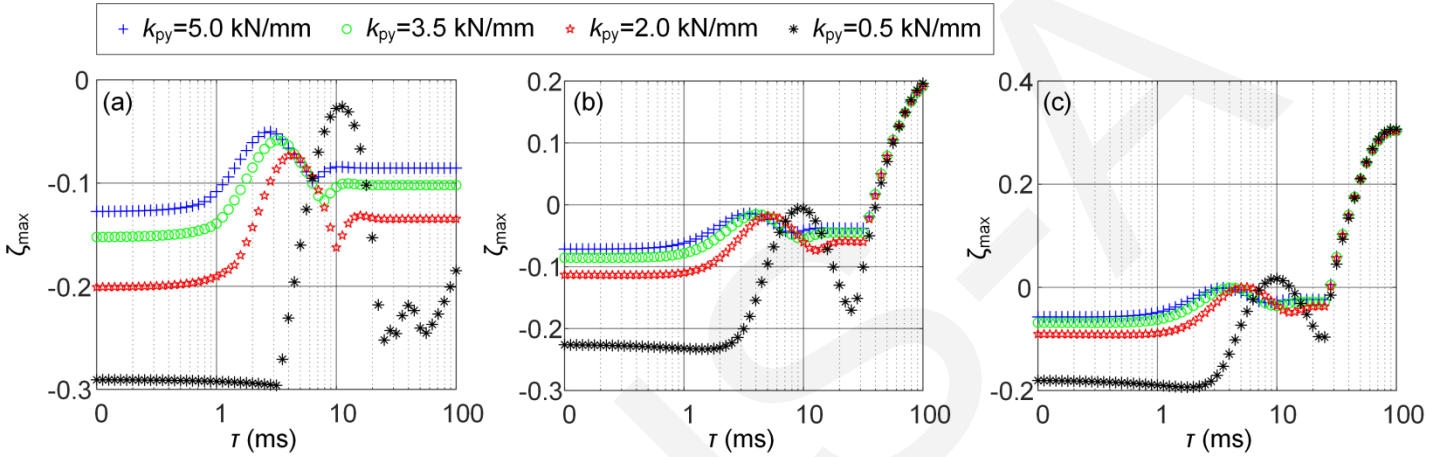

Fig. 3. Linear system stability.

Nonlinear stability analysis

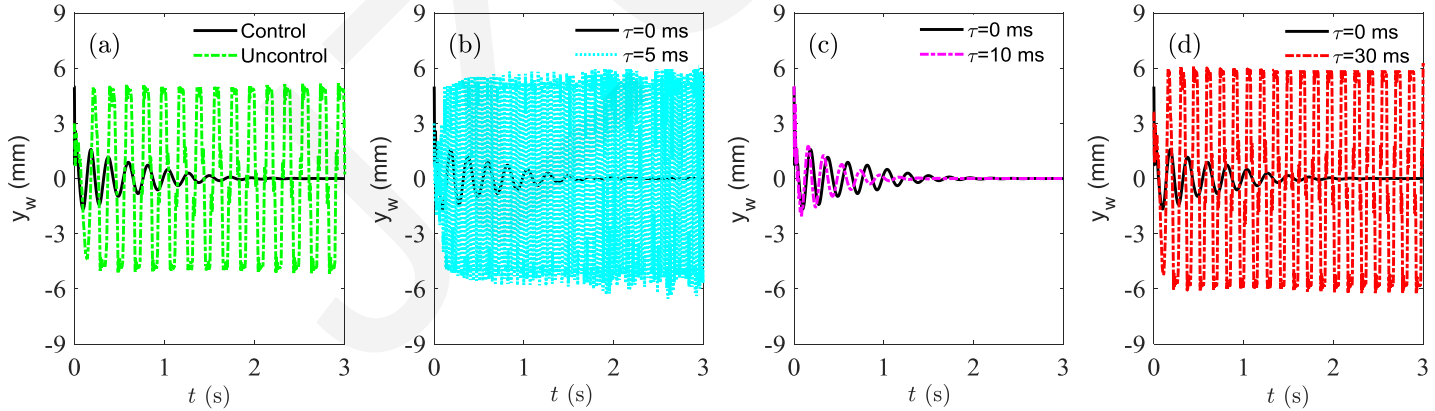

Fig. 4. Wheelset lateral displacement.

Experimental Analysis

- **Bogie active control experimental platform**

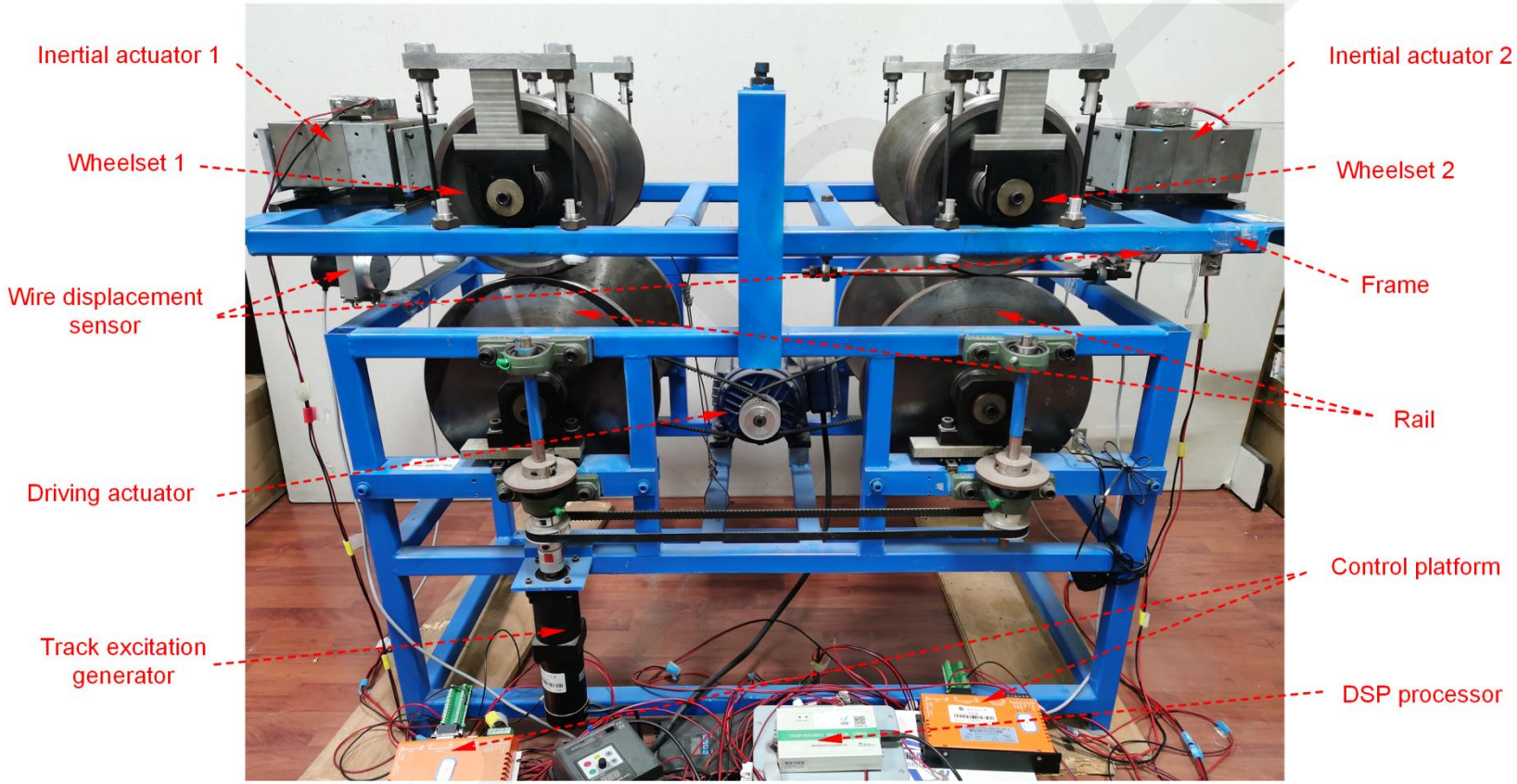

Fig. 5. Bogie scale test rig.

Experimental Analysis

Time domain results

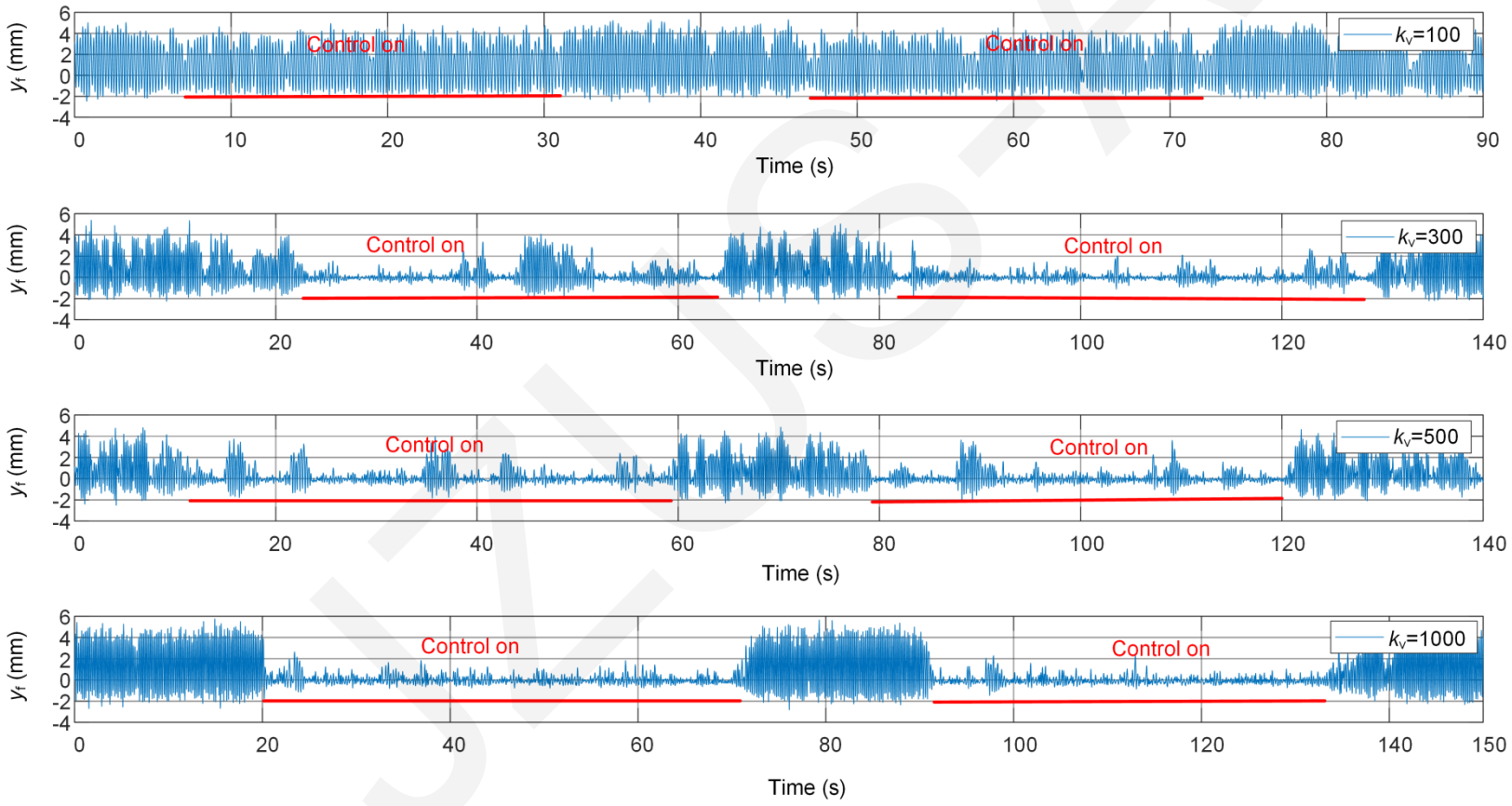

Fig. 6. Bogie frame lateral displacement.

Experimental Analysis

Frequency domain results

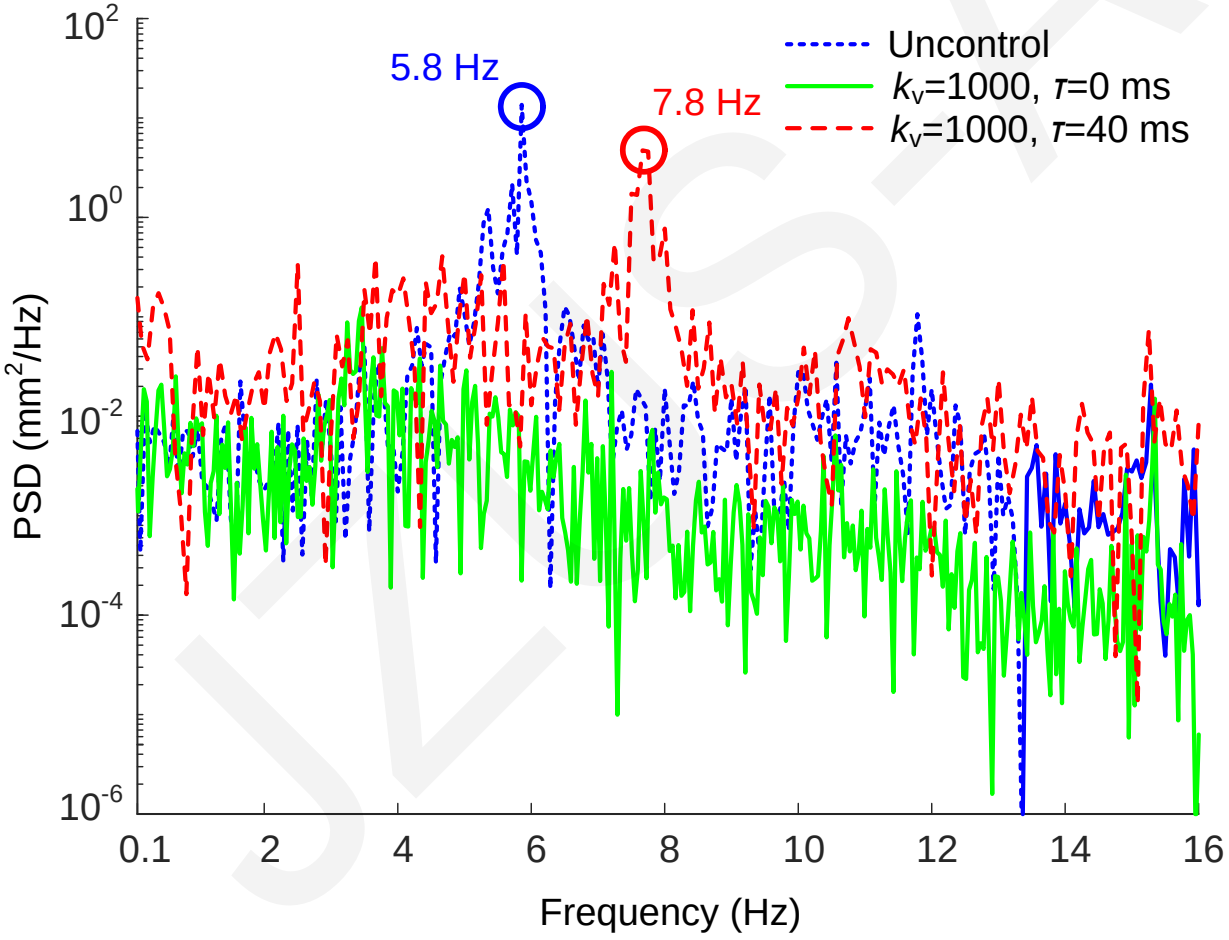

Fig. 7. PSD curves of bogie frame lateral displacement.

Conclusions

- The bogie active stability method based on frame lateral vibration control can effectively improve the critical speed of the bogie system, and the frame velocity feedback has a bigger effect on stability than the displacement feedback.
- The small delay or large delay is not conductive to the stability of bogie system. This should be taken into account in the actual design of control system parameter adjustment.

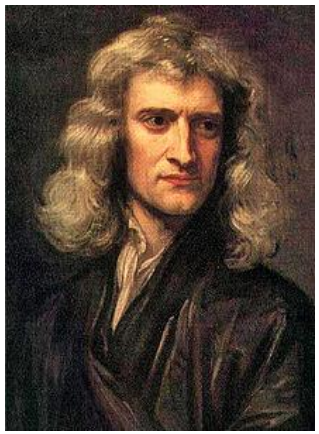

I do not know what I may appear to the world, but to myself I seem to have been only like a boy playing on the seashore, and diverting myself in now and then finding a smoother pebble or a prettier shell than ordinary, while the great ocean of truth lay all undiscovered before me.