Journal of Zhejiang University-SCIENCE A (Applied Physics & Engineering)

Adaptive cropping shallow attention network for defect detection of bridge girder steel using unmanned aerial vehicle images

Zonghan Mu

Cite this as: Zonghan MU, Yong QIN, Chongchong YU, Yunpeng WU, Zhipeng WANG, Huaizhi YANG, Yonghui HUANG, 2023. Adaptive cropping shallow attention network for defect detection of bridge girder steel using unmanned aerial vehicle images. *Journal of Zhejiang University-SCIENCE A (Applied Physics & Engineering)*, 24(3):243-256. https://doi.org/10.1631/jzus.A2200175

Data Acquisition and Detection

- **UAV image acquisition and intelligent detection**

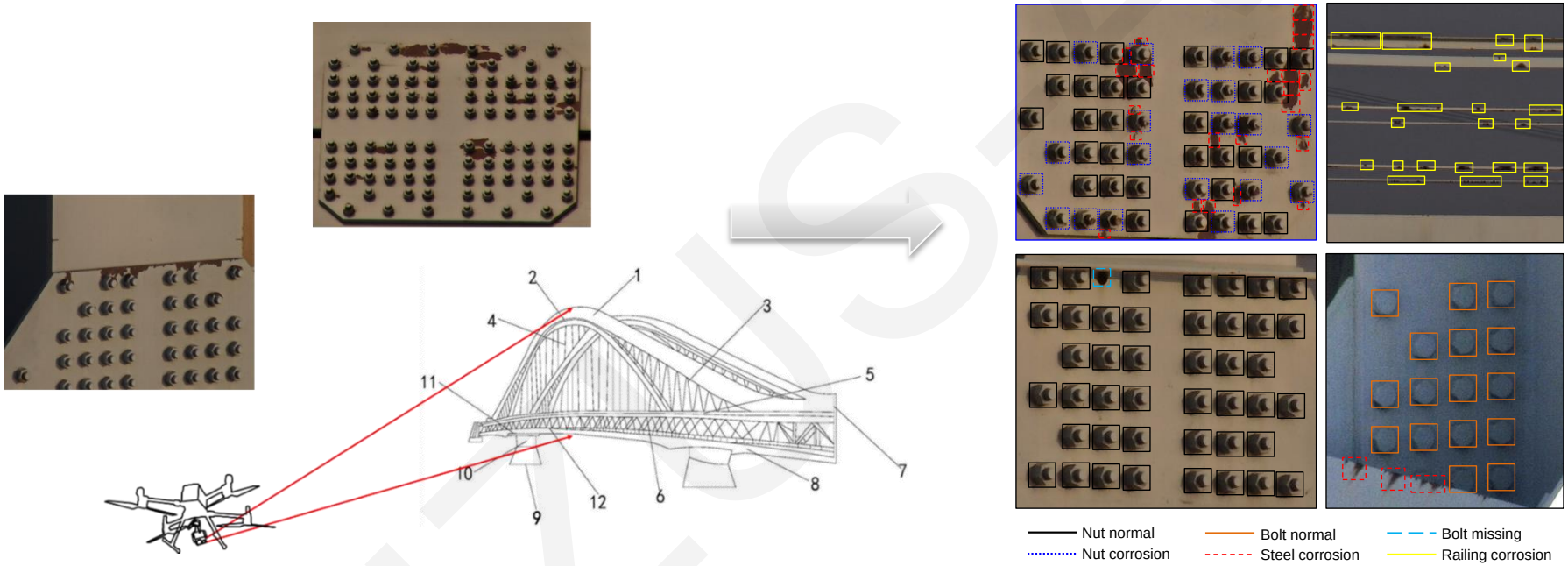

Fig. 1. The UAV takes pictures of the steel structure of the railway bridge steel, and the deep learning visual algorithm is used to detect the surface defects of the bridge steel structure

Adaptive cropping strategy

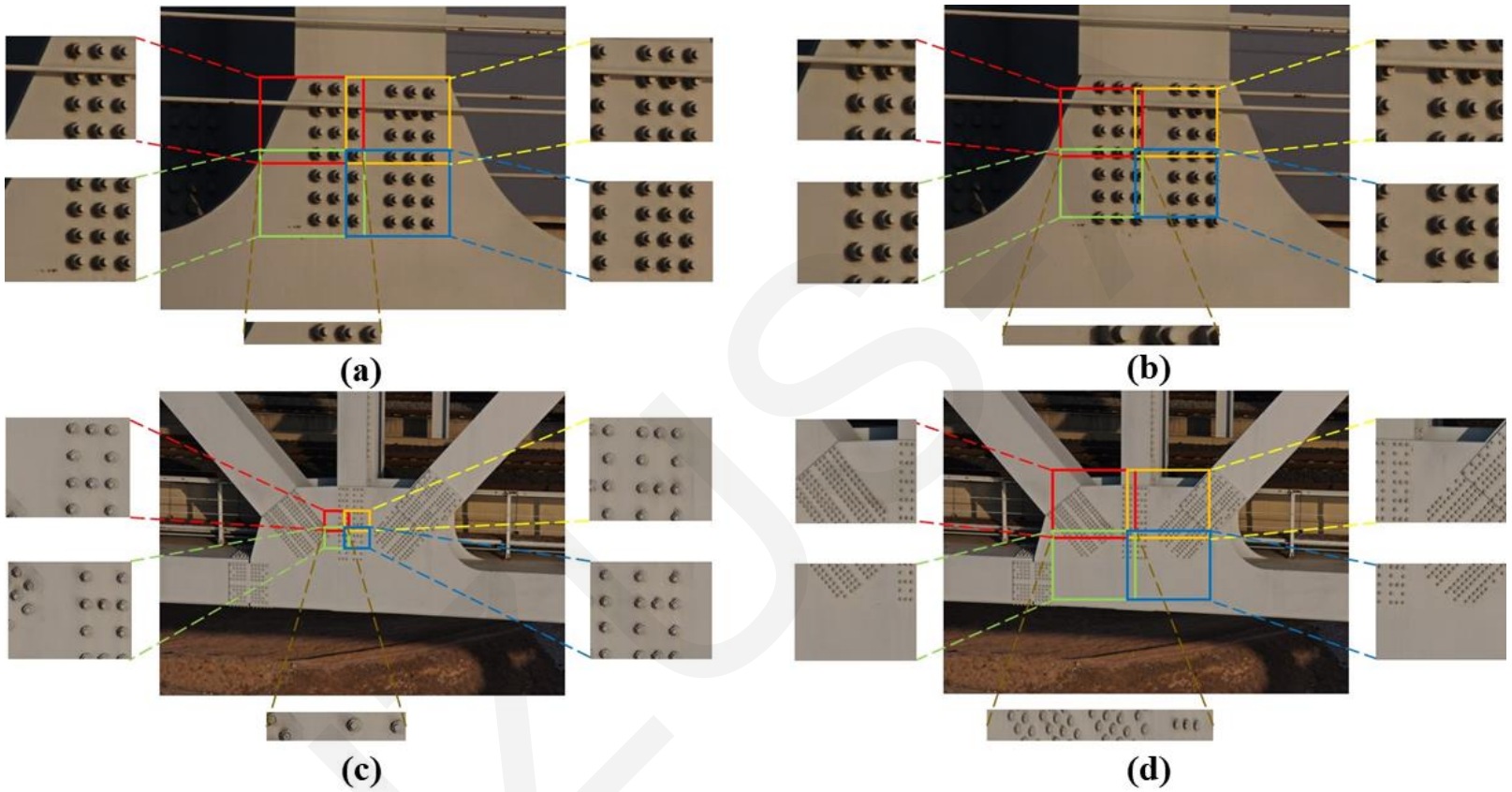

Fig. 2. Comparison diagram of adaptive cropping strategy and overlapping cropping strategy: (a) Adaptive cropping of large detection targets; (b) Overlapping cropping of large detection targets; (c) Adaptive cropping of small detection targets; (d) Overlapping cropping of small detection targets

Structure of Detection Network

- **Adaptive cropping shallow attention network (ACSANet)**

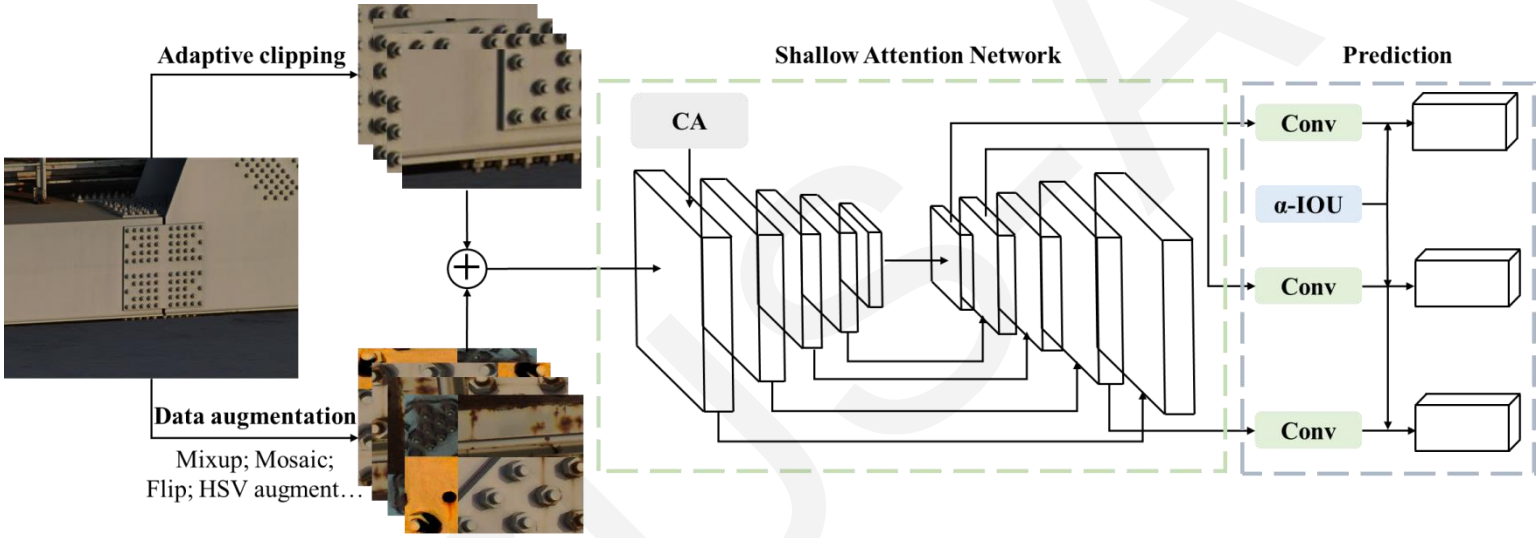

Fig. 3. Architecture of ACSANet.

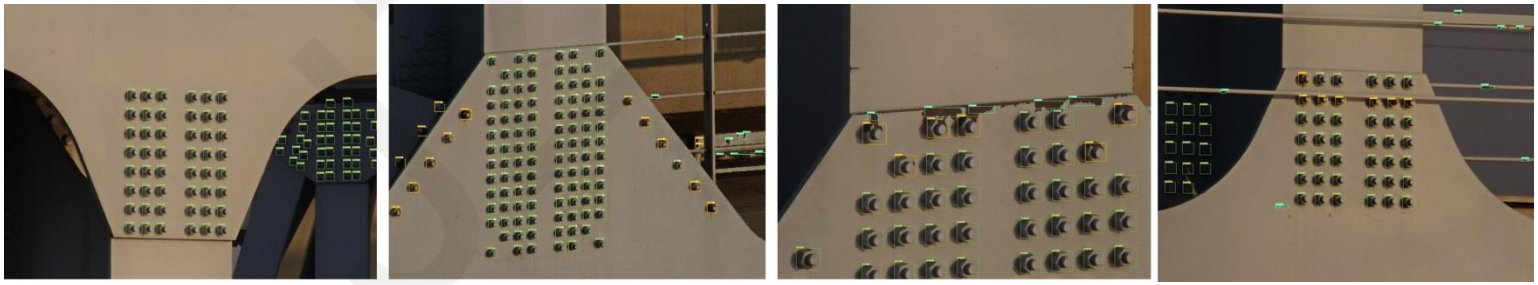

Fig. 4. Detection results of ACSANet.

Advantages of ACSANet

■Results of the ACSANet compared with other networks

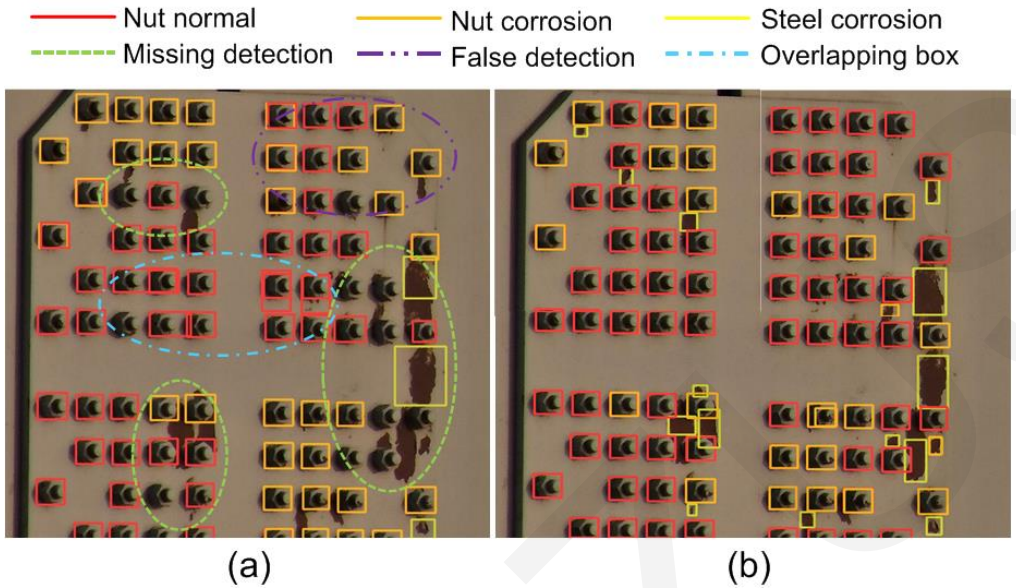

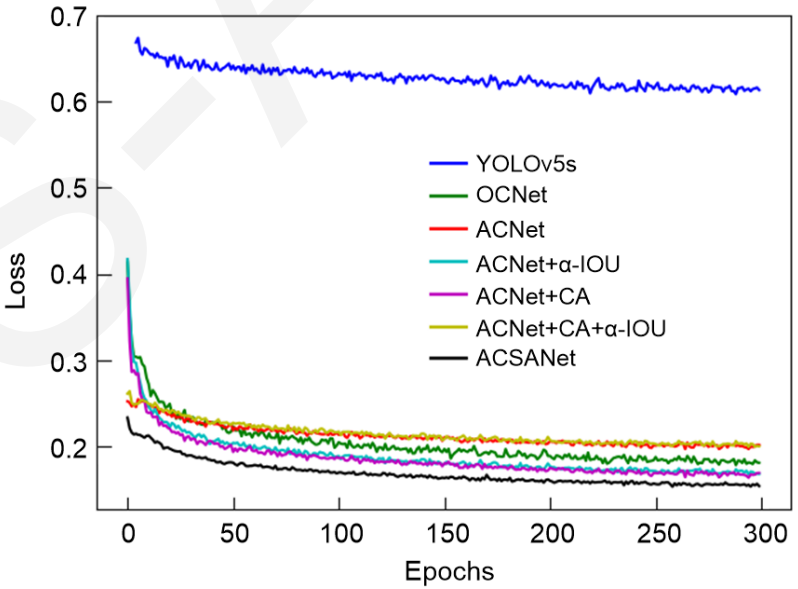

Fig. 5. Detection effect comparison of YOLOv5s (a) and ACSANet (b) on railway bridge steel.

Fig. 6. Loss curves of ACSANet and other networks.

Conclusions

- **The ACSANet model firstly performs adaptive cropping of UAV images, inputs suitable targets to be detected and image scales, and outputs cropped images with excellent detection effects.**



- **Secondly, the YOLOv5 network structure is improved by incorporating the shallowest features of the backbone network, and a shallow attention network is proposed, so that the target to be detected with simple features will not be affected by the deeper network structure or other similar targets and backgrounds.**
- **Finally, the CA mechanism module is added to the shallow attention network, which makes the detection process pay more attention to the shallow features, while the α-IOU loss function is used in the IOU loss function in the model to improve the detection effect on small data sets.**