Journal of Zhejiang University-SCIENCE A (Applied Physics & Engineering)

An overview of bearing voltages and currents in rail transportation traction motors

Yao LI

Cite this as: Yao LI, Lin QIU, Yongjian ZHI, Zifan GAO, Jien MA, Jian ZHANG, Youtong FANG, 2022. An overview of bearing voltages and currents in rail transportation traction motors. *Journal of Zhejiang University-SCIENCE A (Applied Physics & Engineering)*, 24(3):226-242.
https://doi.org/10.1631/jzus.A2200180

JZUSA

Traditional Bearing Currents

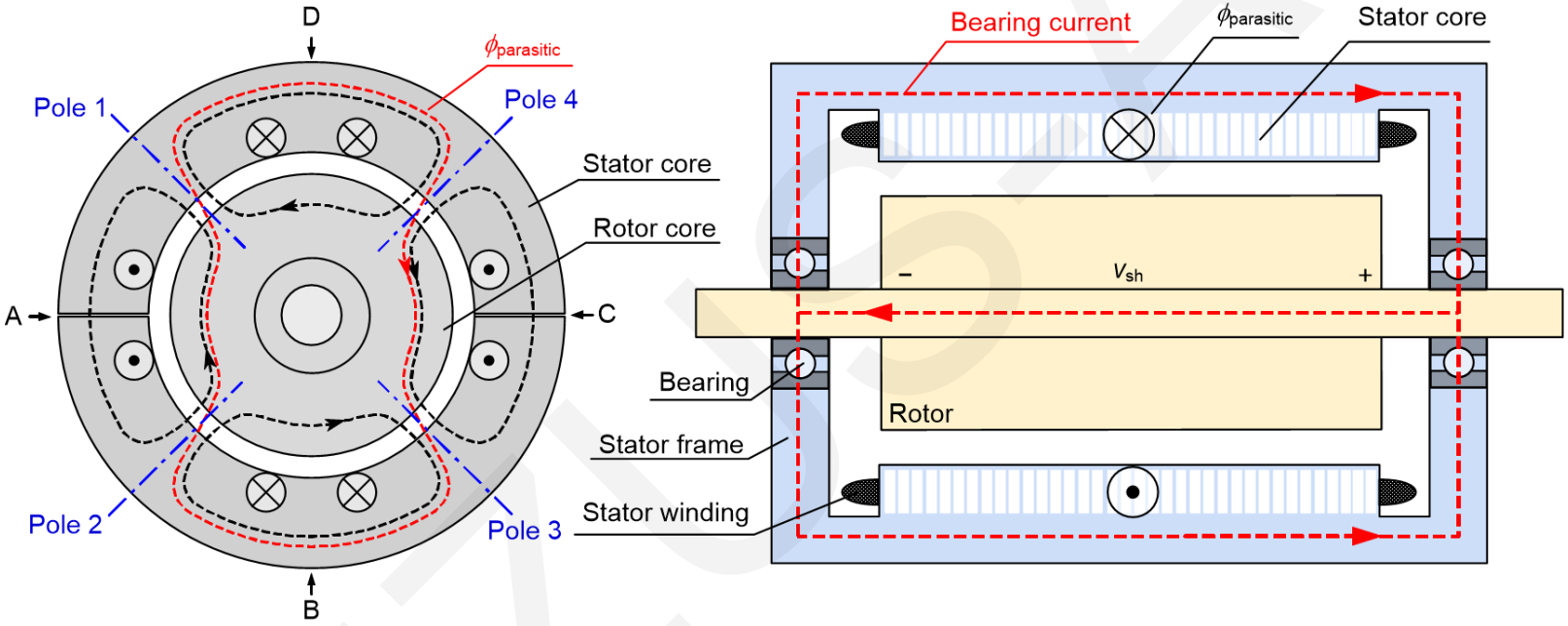

Fig. 1. Bearing currents due to magnetic asymmetries.

High Frequency Bearing Currents

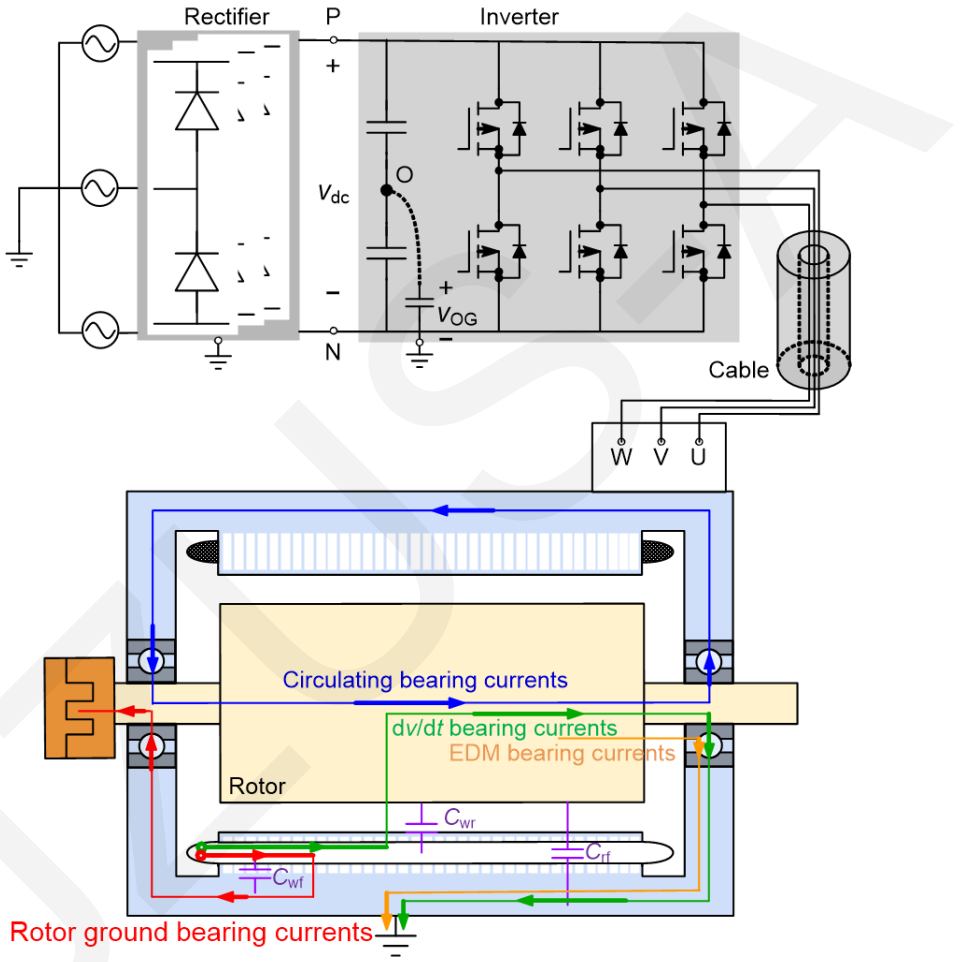

Fig. 2. Bearing currents due to inverter operation.

Electrical Bearing Failure Modes

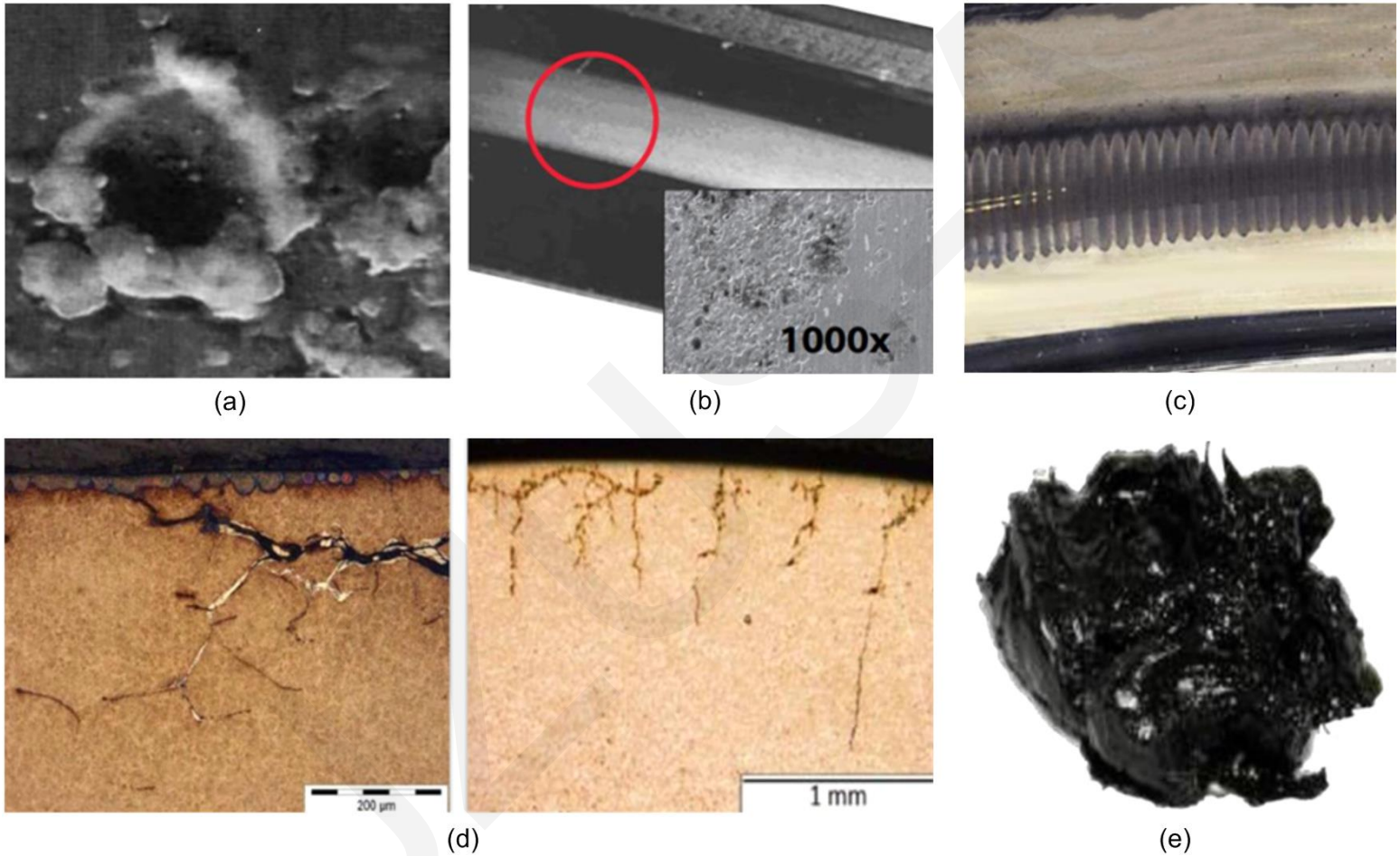

Fig. 3. Bearing currents failure modes. (a) pitting; (b) frosting; (c) fluting; (d) white etching cracks; (e) grease degradation

Equivalent Circuit Model

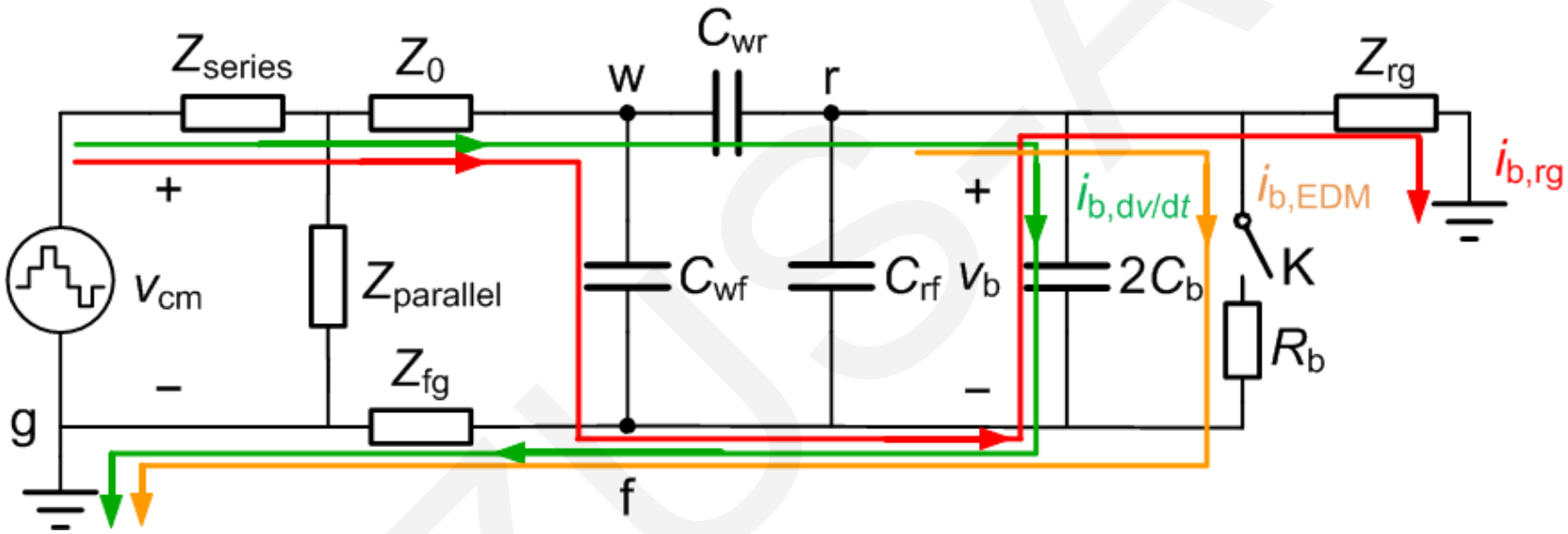

Fig. 4. Non-circulating bearing currents

Metro Traction System

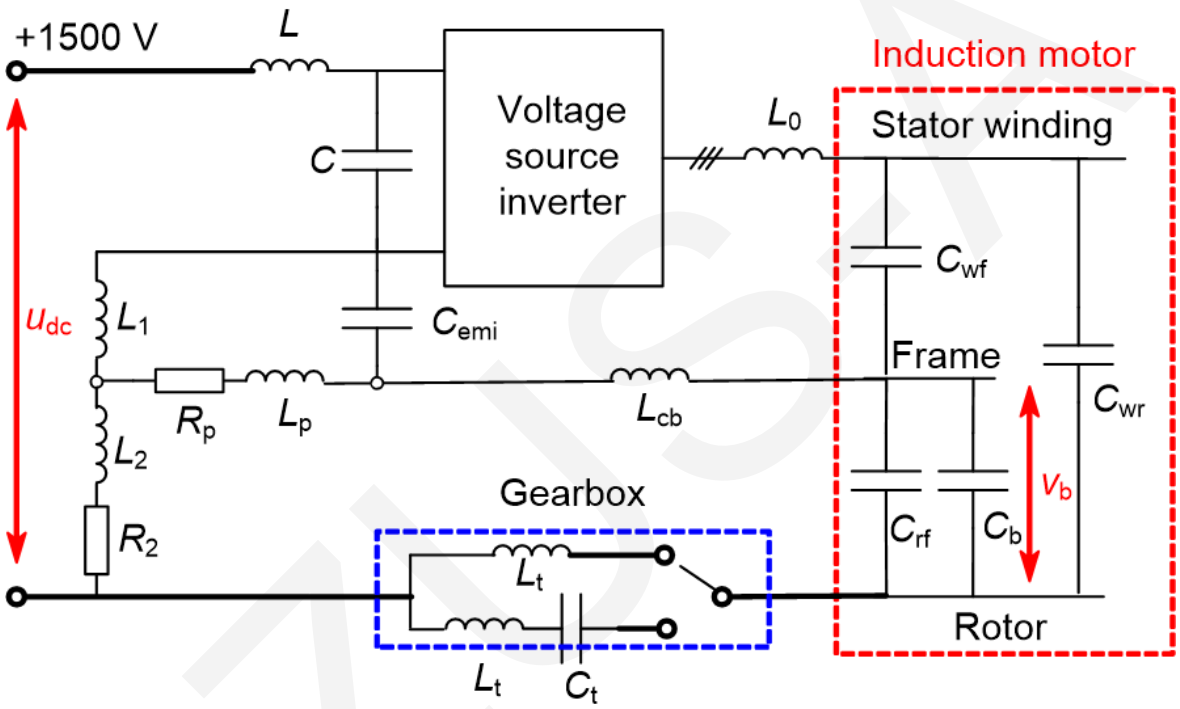

Fig. 5. Equivalent circuit model of metro traction system.

Measured Rotor Grounding Bearing Voltage

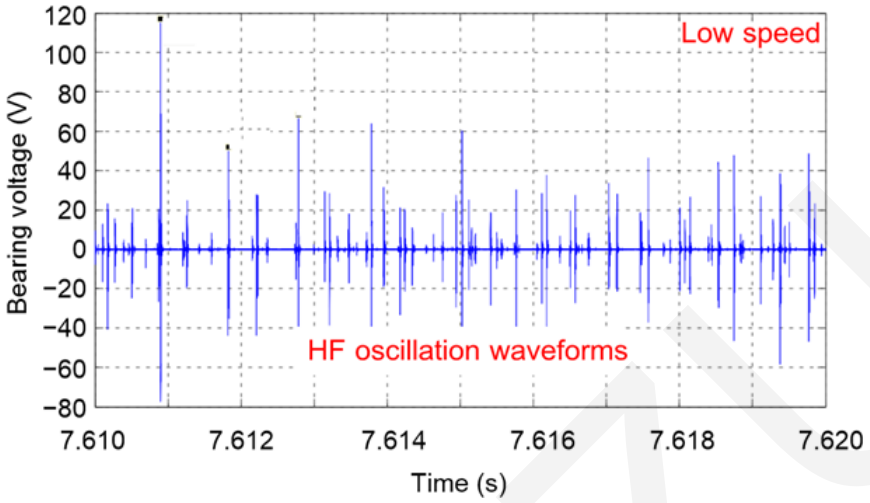

(a) Low-speed waveform

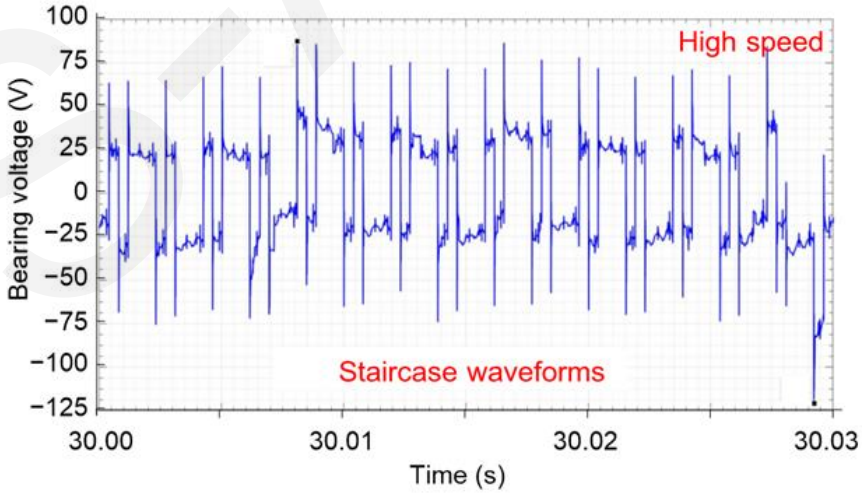

(b) High-speed waveform

Fig. 6. Measured bearing voltage waveforms of a metro project.

Conclusions

- The premature electrical failure of bearings has become a critical issue that has for decades restricted the lifetime of electric motor-based traction systems. In this study, an overview of electrical bearing failures in rail transportation has been presented.
- Related facets such as CM voltages, bearing electrical failure modes, generation and composition of bearing voltages and currents, modeling of bearing currents, and determination of coupling capacitances have been discussed to obtain a comprehensive and systematic perspective on the phenomena.
- On this basis, feasible ways to solve the problem are summarized, and a case study is presented to illustrate the research procedure recommended for the systematic investigation of inverter-induced bearing currents in rail transportation.