Journal of Zhejiang University-SCIENCE A (Applied Physics & Engineering)

Adaptive fault-tolerant control of high-speed maglev train suspension system with partial actuator failure: design and experiments

Yougang SUN, Fengxing LI, Guobin LIN, Junqi XU, Zhenyu HE

Key words:

High-Speed maglev transportation; Suspension control system;

Adaptive fault-tolerant control; Partial actuator failure; Mechatronics

Cite this as: Yougang SUN, Fengxing LI, Guobin LIN, Junqi XU, Zhenyu HE, 2023. Adaptive fault-tolerant control of high-speed maglev train suspension system with partial actuator failure: design and experiments. *Journal of Zhejiang University-SCIENCE A (Applied Physics & Engineering)*, 24(3):272-283. https://doi.org/10.1631/jzus.A2200189

Research Objective

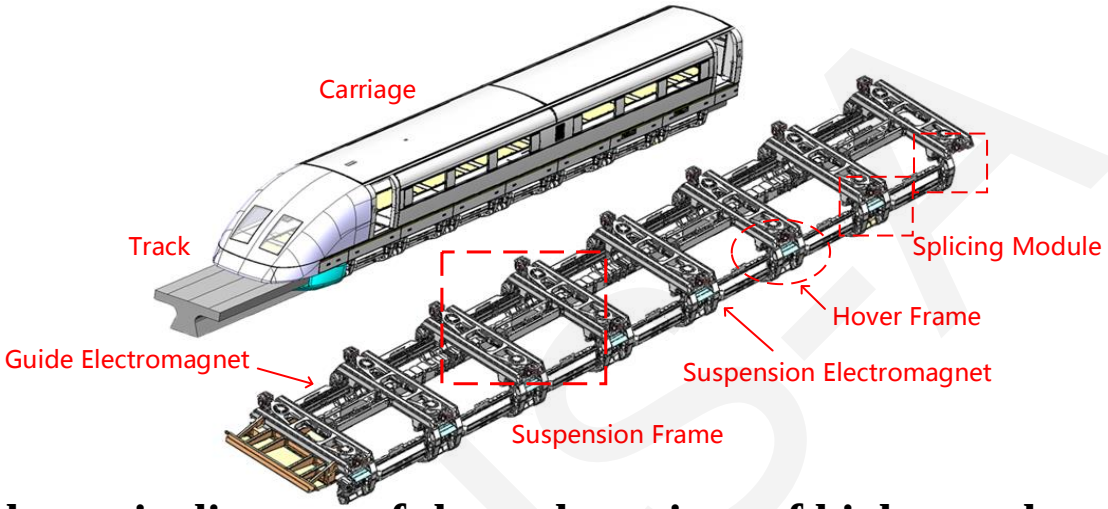

Fig. 1. Schematic diagram of the end carriage of high-speed maglev train.

A new nonlinear fault-tolerant control strategy of adaptive compensation

Strong Magnetic Field

Continuous Operation

Actuator of Suspension System

Lose Effectiveness

- Reduce the cost and energy consumption
- Reduce the payload of maglev train
- Improve the tolerance of fault.

Suspension Model Based on Join-structure

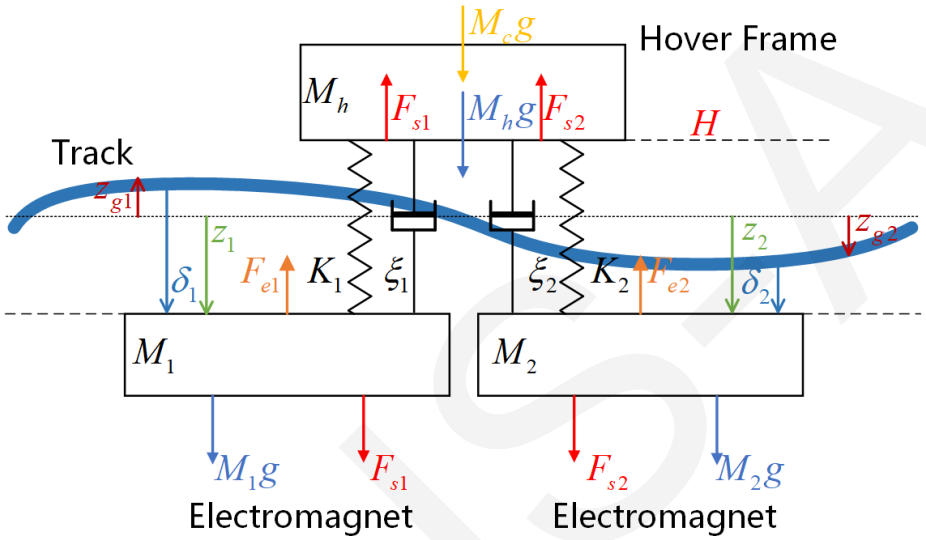

Fig. 2 Schematic diagram of the suspension system based on join-structure

Characteristics of The System

- Open-loop instability
- Strong nonlinear relationship
- High coupling degree of the join-structure

Model Simplification

- Ignore spring damping
- Convert the displacement of hover
- Use current as control variable

Fault-tolerant Control Scheme

The Analysis of Partial Failures

Because the actuator works in a strong electromagnetic environment, it is the most vulnerable part of the suspension control.

Partial failure | **Complete failure** | **Current value jamming faults** | **Saturation faults** | **Floating faults**

$$u_i = \varpi_i u_{ci} + \bar{u}_i \quad (0 \le \varpi_i \le 1 \text{ represents the degree of a partial or total actuator failure})$$

Fault Tolerant Controller Design

Through mathematical analysis, a nonlinear fault-tolerant suspension control law with adaptive update law is designed(the following is the control law and sliding surface of the left electromagnet).

$$i_1(t) = \sqrt{\frac{1}{\kappa_1}\delta_1^2\hat{\xi}_l\left(k_{t1}s_1 + c_1\dot{e}_1 + g + \frac{K_s(x_3 - x_1)}{2M_1} + \frac{(M_h + M_c)}{2M_1}g - \ddot{x}_d\right)}$$

$$\dot{\hat{\xi}}_l = \lambda_l s_l\left(k_{tl}s_l + c_l\dot{e}_l + g + \frac{K_s(x_3 - x_1)}{2M_1} + \frac{(M_h + M_c)}{2M_1}g - \ddot{x}_d\right)\mathrm{sgn}(\varphi_l)$$

Lyapunov theory and extended Barbalat lemma are used to strictly prove closed-loop asymptotic stability

$$\begin{aligned}\dot{V} &= s_1(\gamma_1 - k_{t1}s_1 - \varphi_1\hat{\xi}_1\gamma_1) + \varphi_1\tilde{\xi}_1 s_1\gamma_1 + s_2(\gamma_2 - k_{t2}s_2 - \varphi_2\hat{\xi}_2\gamma_2) + \varphi_2\tilde{\xi}_2 s_2\gamma_2 \\ &= s_1(\gamma_1 - k_{t1}s_1 - \varphi_1\xi_1\gamma_1) + s_2(\gamma_2 - k_{t2}s_1 - \varphi_1\xi_1\gamma_1) \\ &= -k_{t1}s_1^2 - k_{t2}s_2^2 \le 0\end{aligned}$$

Experimental Results

The experiments are carried out on a high-speed maglev vehicle-rail magnetic coupling experiment platform.

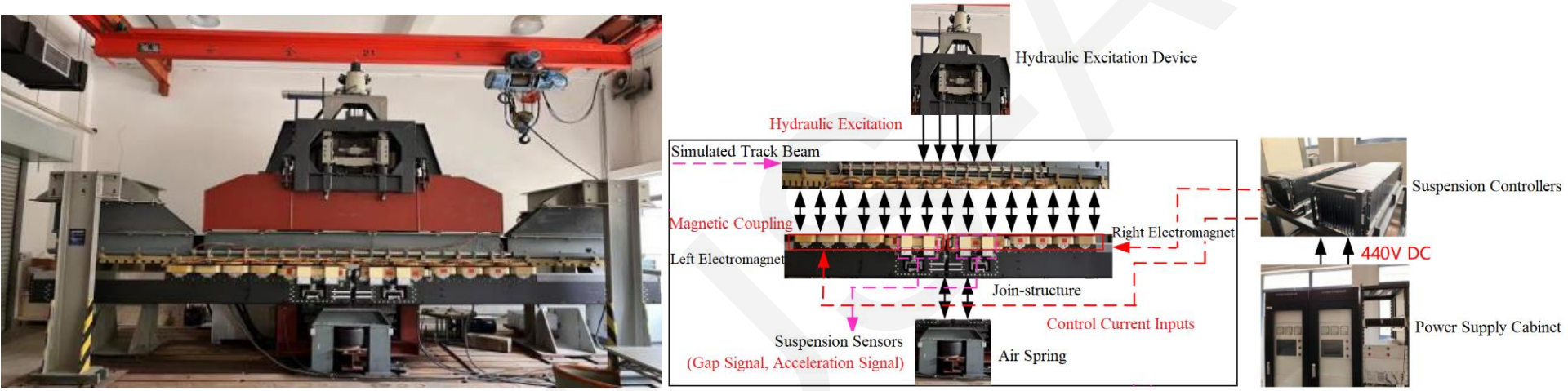

Fig. 3 High-speed maglev vehicle-rail magnetic coupling experiment platform

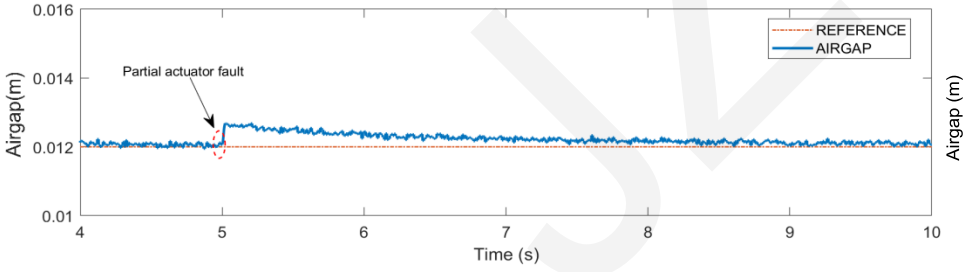

Fig. 4 Proposed FTC: air gap response with partial actuator failure ($\varpi_1 = 0.5$)

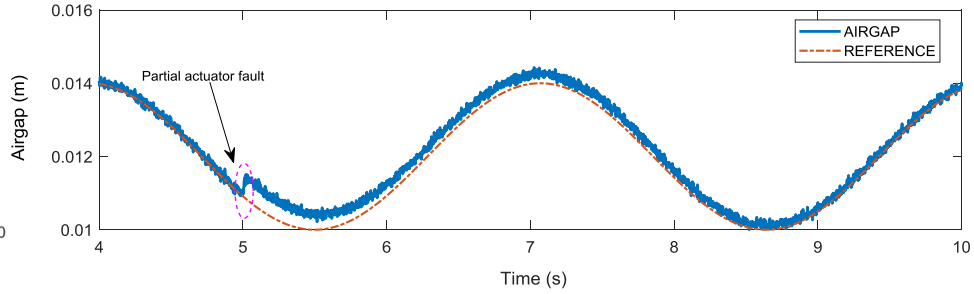

Fig. 5 Proposed FTC: Air gap tracking response with partial actuator failure ($\varpi_1 = 0.5$)

Innovation And Conclusions

- Without knowing the fault information of the actuator, the adaptive compensation control law changes with the occurrence of the system fault, and adaptively reconstructs to reduce the conservatism of the system;
- Without any linearization approximation, the design and stability of the controller are proved.

- The proposed nonlinear fault-tolerant control strategy with adaptive compensation achieves superior suspension control performance in case of partial actuator failure without fault diagnosis and isolation. The derived fault-tolerant control law has a simple structure, and the control law can change adaptively with the occurrence of faults, thus improving the reliability and transient performance of the system. Through strict mathematical analysis, it is proved that the whole closed-loop system is globally asymptotically stable;
- Through hardware experiments, conventional suspension control or tracking suspension control is realized, and some actuator faults in practice are compensated, with good robustness.