Journal of Zhejiang University-SCIENCE A (Applied Physics & Engineering)

Investigations on lubrication characteristics of high-speed electric multiple unit gearbox by oil volume adjusting device

Shuai SHAO, Kai-lin Zhang, Yuan YAO, Yi LIU, Jun GU

Cite this as: Shuai SHAO, Kai-lin ZHANG, Yuan YAO, Yi LIU, Jun GU, 2022. Investigations on lubrication characteristics of high-speed electric multiple unit gearbox by oil volume adjusting device. *Journal of Zhejiang University-SCIENCE A (Applied Physics & Engineering)*, 23(12):1013-1026.
https://doi.org/10.1631/jzus.A2200274

Model and Simulation conditions

Gearbox model

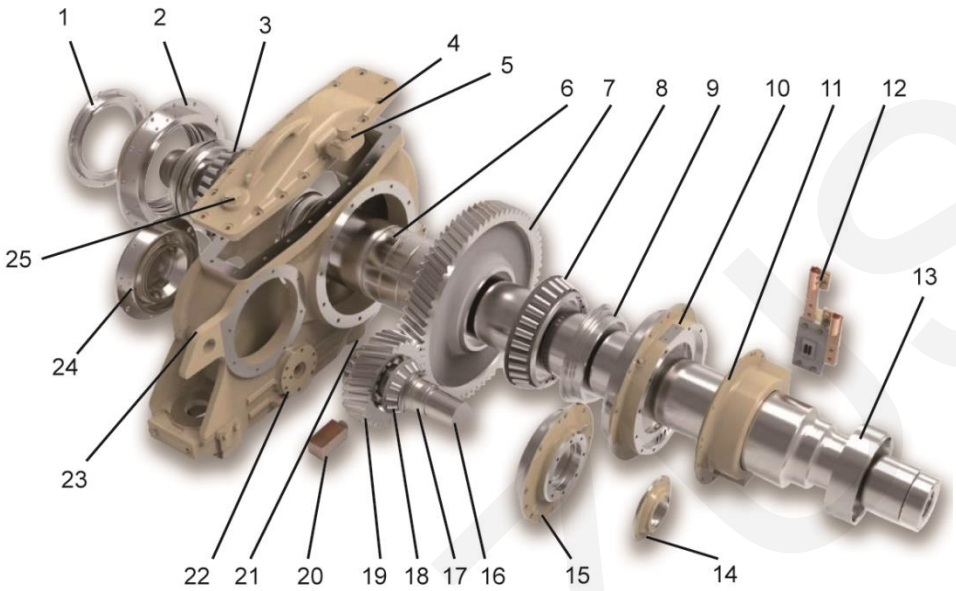

No.	Name	No.	Name
1	Output shaft end cover · GW	14	Input shaft end cover · PM
2	Output shaft bushing · GW	15	Input shaft bushing · PM
3	Output shaft seal ring · GW	16	Input shaft seal ring 1·PM
4	Upper end cover of casing	17	Input shaft seal ring 2·PM
5	Breather assembly	18	Tapered roller bearing of input shaft
6	Output shaft	19	Input gear
7	Output gear	20	Oil volume adjusting device
8	Tapered of output shaft	21	Oil expulsion plug
9	Output shaft end cover · GM	22	Magnetic plug
10	Output shaft bushing · GM	23	casing
11	Output shaft seal ring · GM	24	Input shaft bushing · PW
12	Grounding device assembly	25	Cleaning plug
13	Collector ring		

Fig. 1. Exploded view of high-speed EMU gearbox. GW represents the outgear wheel side; GM represents the outgear motor side; PW represents the ingear wheel side; PM represents the ingear motor side

Model and Simulation conditions

Gearbox parameters

Parameter	Value	Parameter	Value
Module (mm)	7	Center distance (mm)	362
Tooth number of input gear	22	Helix angle (°)	20
Tooth number of output gear	75	Pressure angle (°)	26
Tooth width (mm)	70		
Bearings installed on input shaft	NSK-SHA/R70	Inner Diameter (mm)	70
		Outer Diameter (mm)	150
		Bearing width (mm)	38
Bearings installed on output shaft	NSK-SHA/R205	Inner Diameter (mm)	205
		Outer Diameter (mm)	310
		Bearing width (mm)	60

Oil volume adjusting device

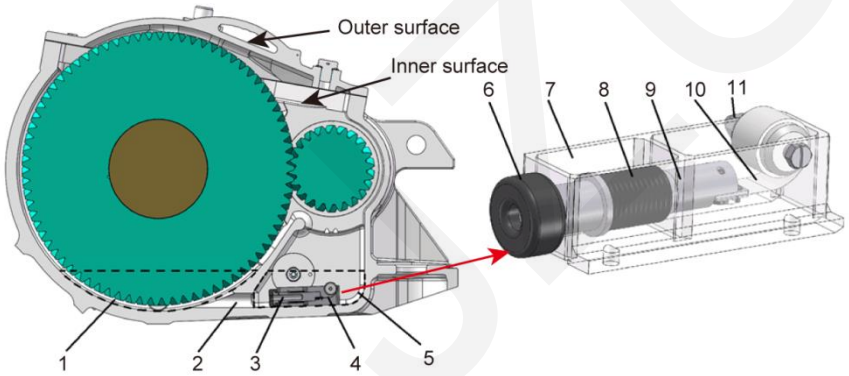

No.	Name	No.	Name
1	Cavity gear	7	Frame
2	Cavity connecting hole	8	Shape memory alloy spring
3	Flow regulating hole	9	Moving shaft
4	Oil volume adjusting device	10	Constant force scroll spring
5	Cavity pinion	11	Reel
6	Rubber plug		

Fig. 2. Installation position and structure diagram of the oil volume adjusting device

Model and Simulation conditions

Simulation process

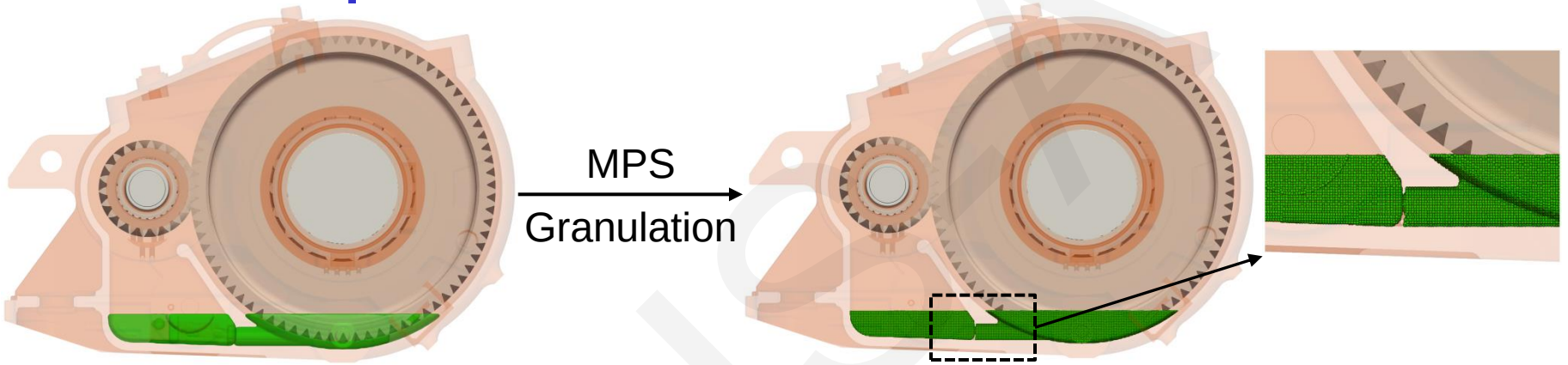

Fig. 3. Schematic diagram of lubricating oil granulation.

Simulation conditions

Model	Immersion depth ($\times h$)	Velocity of EMU (m/s)	Temperature of lubricant (℃)
GK01	3.5	34.7	60
GK02	3.0	34.7	60
GK03	2.5	34.7	60
GK04	2.0	34.7	60
GK05	3.0	8.3	60
GK06	3.0	16.7	60
GK07	3.0	25.0	60
GK08	3.0	33.3	60
GK09	3.0	41.7	60
GK10	3.0	50.0	60
GK11	3.0	55.6	60
GK12	3.0	34.7	−25
GK13	3.0	34.7	0
GK14	3.0	34.7	30
GK15	3.0	34.7	90

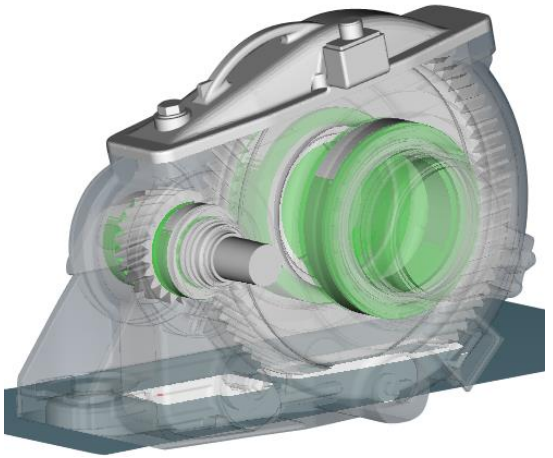

Fig. 4. Annular monitoring sample window on bearing.

Experimental verification

Oil distribution

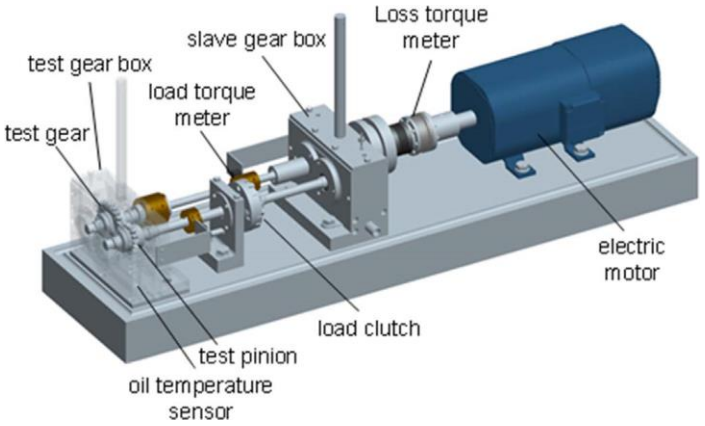

Fig. 5. Mechanical layout of the FZG efficiency gear test rig.

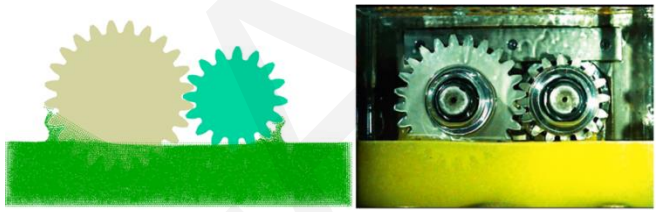

(a) v_t=2.3 m/s after 50°

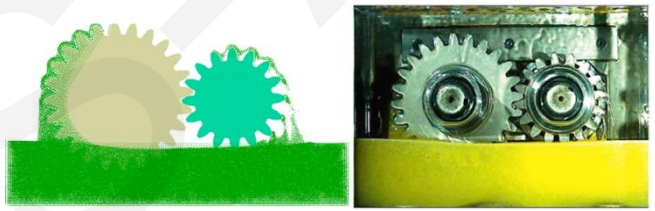

(b) v_t=2.3 m/s after 100°

Fig. 6. Comparison of oil distributions.

Churning loss

H. Liu et al., Tribology International 109, 346-354 (2017).

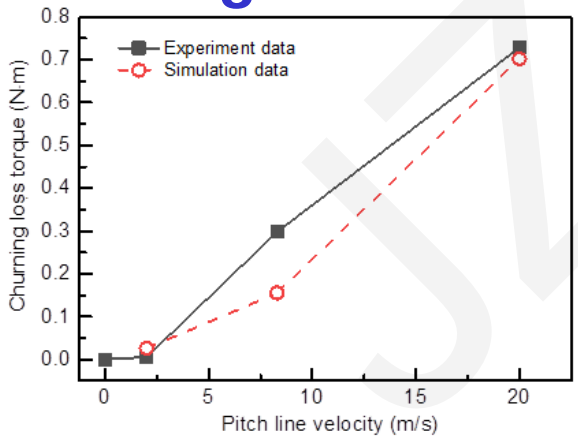

(a) oil level=21.6 mm below center, T=60 ℃

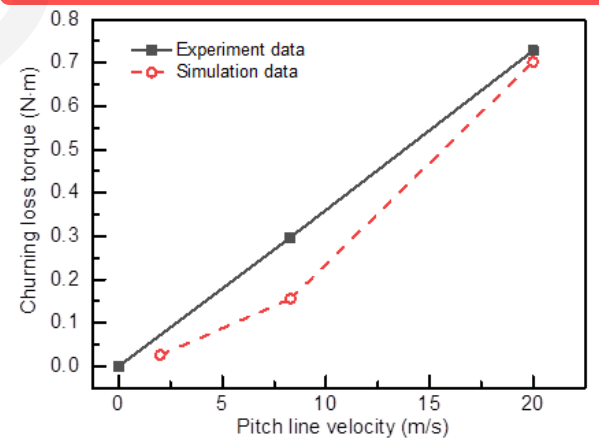

(b) oil level=20 mm below center, T=90 ℃

Fig. 7. Comparison of churning loss.

Results and discussion

Analysis of flow field characteristics in the gearbox

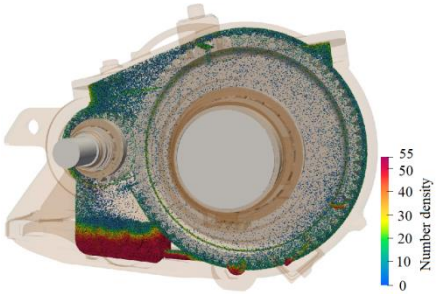

(a) Number density

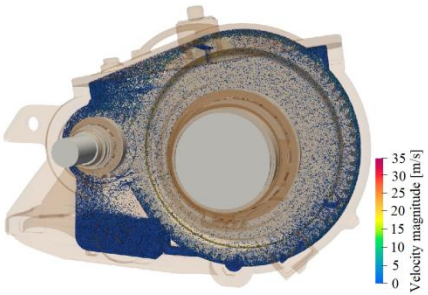

(b) Velocity field distribution



(c) Coverage rate average

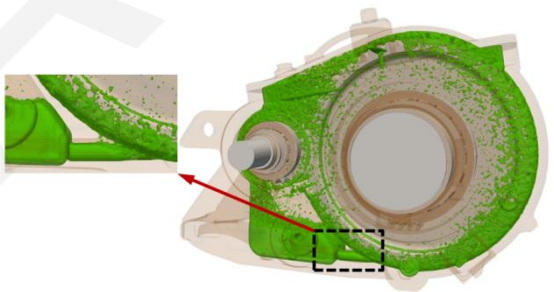

(d) Lubricate distribution

Fig. 8. Flow field characteristics of gearbox under GK02-C.

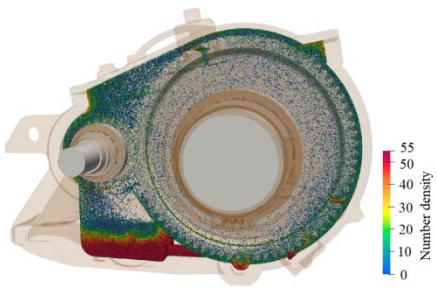

(a) Number density

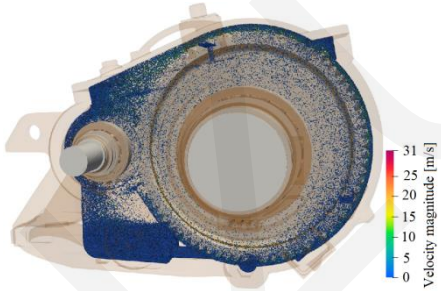

(b) Velocity field distribution



(c) Coverage rate average

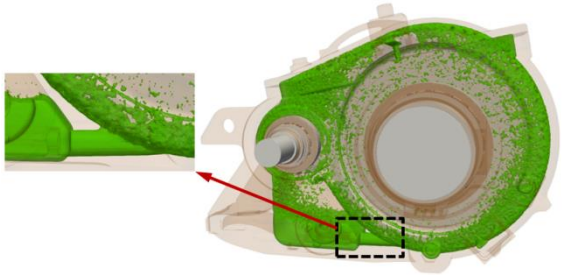

(d) Lubricate distribution

Fig. 9. Flow field characteristics of gearbox under GK02-O.

Results and discussion

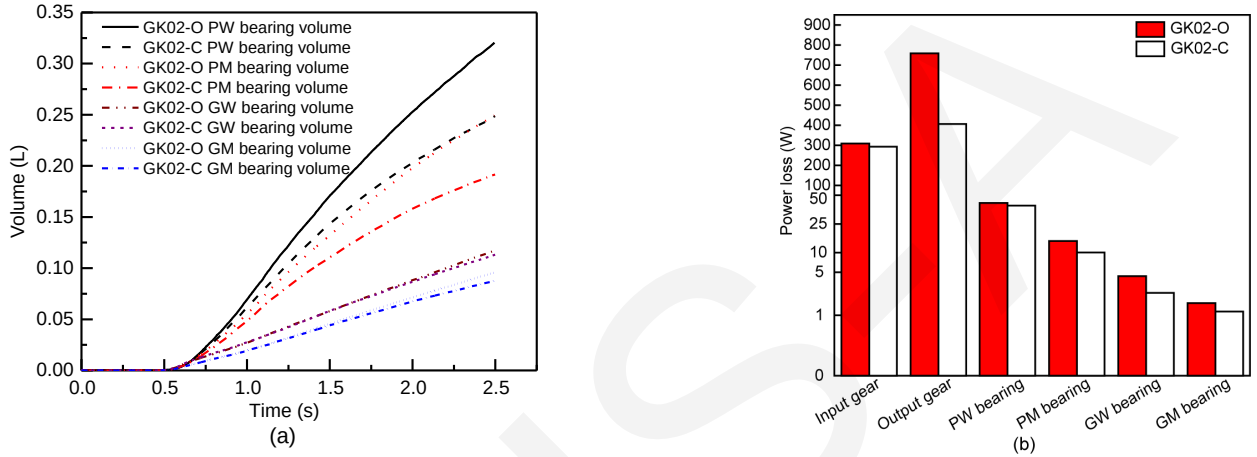

Fig. 10. Comparison of lubrication characteristics under GK02: (a) lubricant volume of bearings; (b) power loss of gears.

Influence of velocities

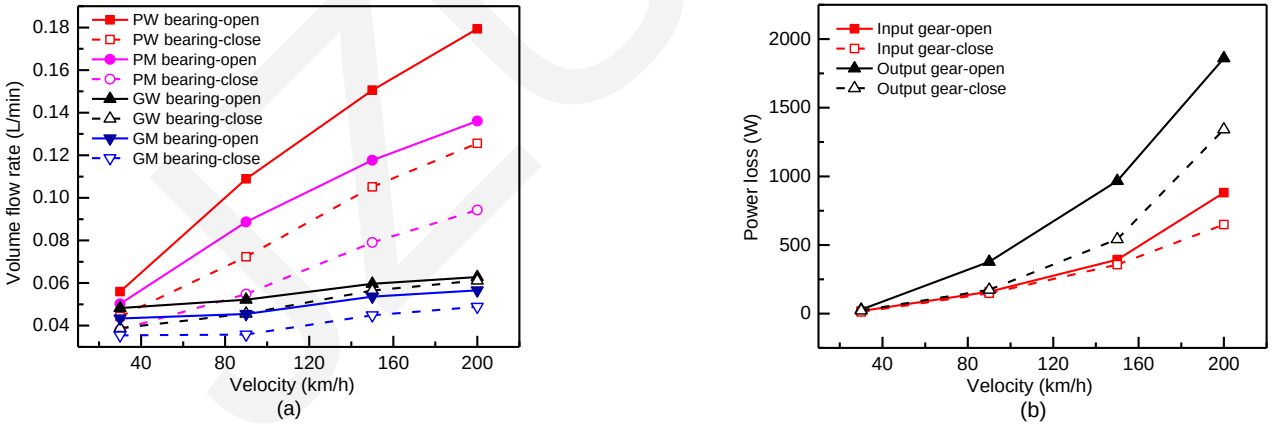

Fig. 11. Comparison of lubrication characteristics with different velocities: (a) volume flow rate of each bearing; (b) power loss of gear pair

Results and discussion

Influence of oil immersion depths

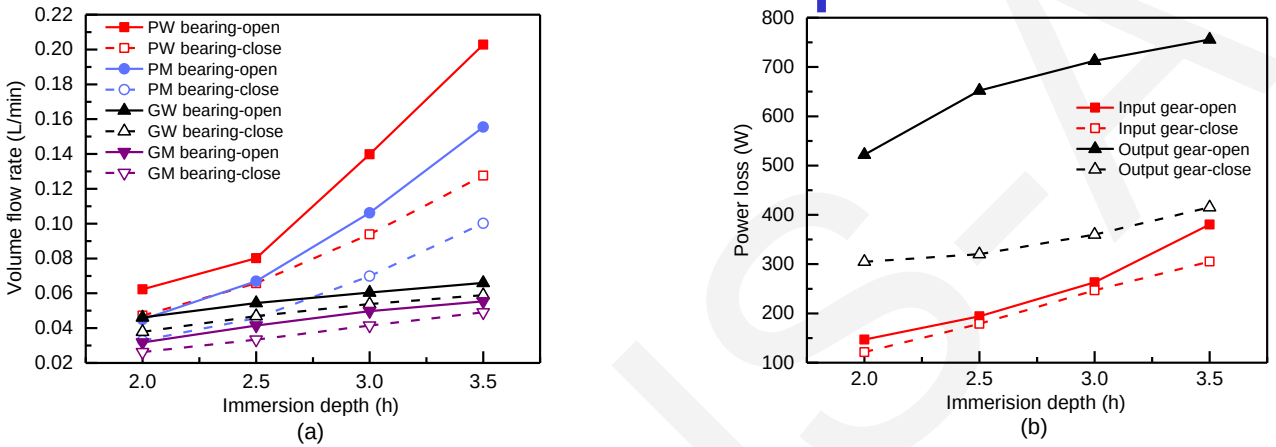

Fig. 12. Comparison of lubrication characteristics with different oil immersion depths: (a) volume flow rate of each bearing; (b) power loss of gear pair

Influence of oil sump temperatures

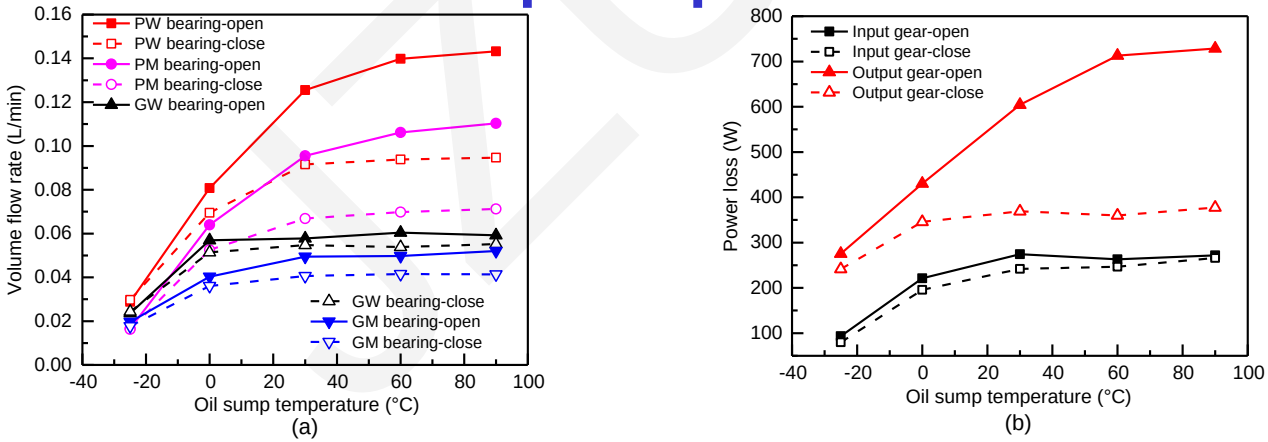

Fig. 11. Comparison of lubrication characteristics with different oil sump temperatures: (a) volume flow rate of each bearing; (b) power loss of gear pair

Conclusions

- The MPS method has great advantages in analyzing the splash lubrication characteristics of a complex gearbox and in providing a theoretical basis for analyzing the lubrication characteristics of complex models.
- The power loss of gears and the volume flow rate of lubricant of each bearing are positively correlated with the velocity of the EMU, the immersion depth, and the oil sump temperature. The velocity has the greatest influence on the power loss of gears, and the higher the velocity, the more obvious the trend of power loss increases. The volume flow rate of lubricant of each bearing is most sensitive to the immersion depth. The deeper the immersion depth of output gear, the more obvious the growth trend of the volume flow rate of oil supply to each bearing.
- Oil volume adjusting device mainly reduces the power loss of gears and the lubricant volume flow rate of each bearing by reducing the amount of lubricant stirred by the output gear.

JZUSA