Cite this as: Jinchi SUN, Xiongwei TIAN, Zhangqing LIU, Jie SUN, Menglian ZHENG, 2023. Microfluidic fuel cells integrating slanted groove micro-mixers to terminate growth of depletion boundary layer thickness. *Journal of Zhejiang University-SCIENCE A (Applied Physics & Engineering)*, 24(10):859-874.
https://doi.org/10.1631/jzus.A2300087

Microfluidic fuel cells integrating slanted groove micro-mixers to terminate growth of depletion boundary layer thickness

Key words:

Microfluidic; Fuel cell; Membraneless; Slanted groove micro-mixer; Mass transfer; Depletion boundary layer

Traditional microfluidic fuel cell and concentration boundary layer

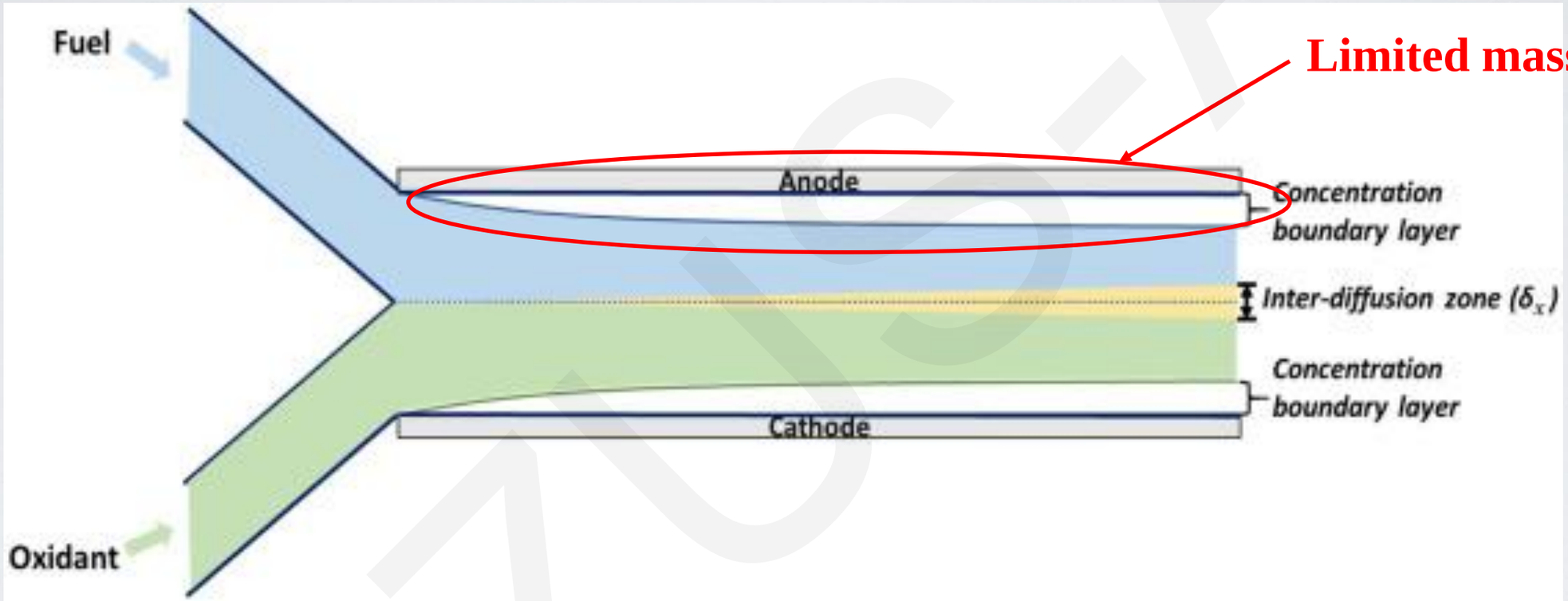

- **Microfluidic fuel cells operate in the co-laminar flow regime to prevent convection mixing of oxidant and fuel. In this regime, a depletion boundary layer keeps growing near the electrode, resulting in severe mass transfer limitation of the current density.**

Microfluidic fuel cell with SGM

Traditional microfluidic fuel cell

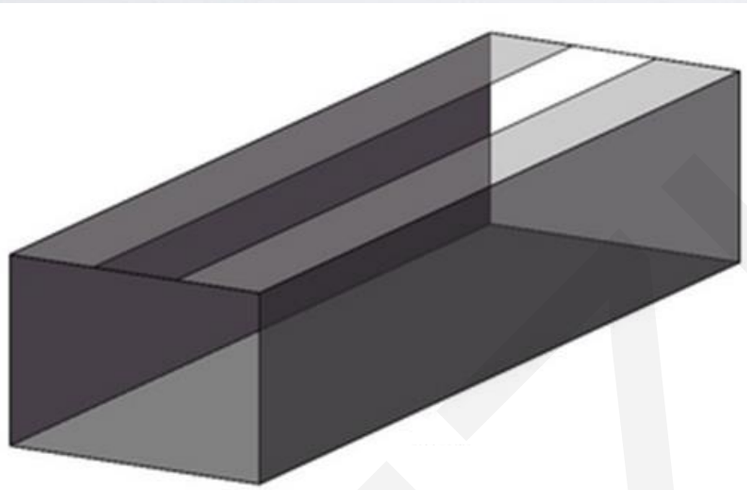

Microfluidic fuel cell with slanted groove micro-mixer

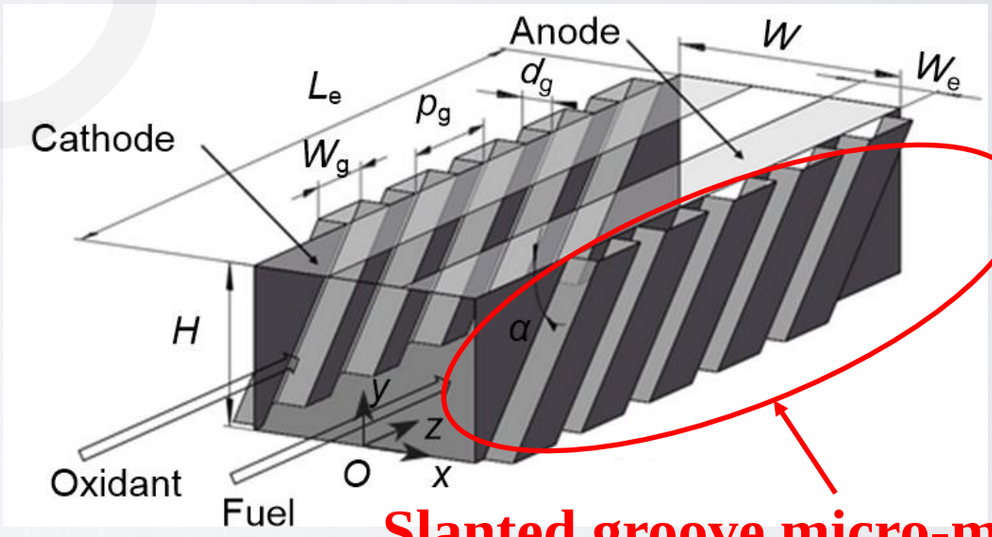

Slanted groove micro-mixer

- **Slanted groove micro-mixers could terminate the growth of the depletion boundary layer by generating a transverse secondary flow.**

Geometries of the three microfluidic fuel cell designs in our research

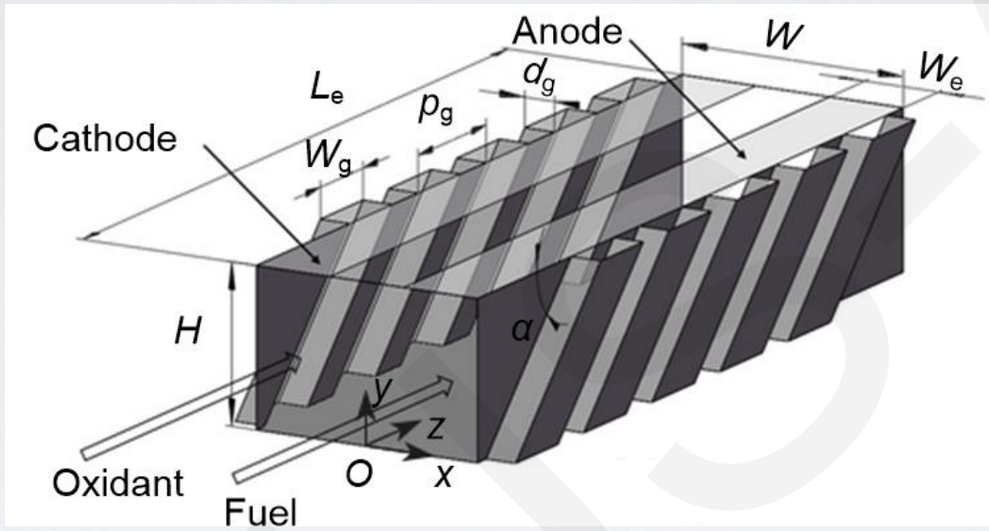

Electrodes on the top wall, N1

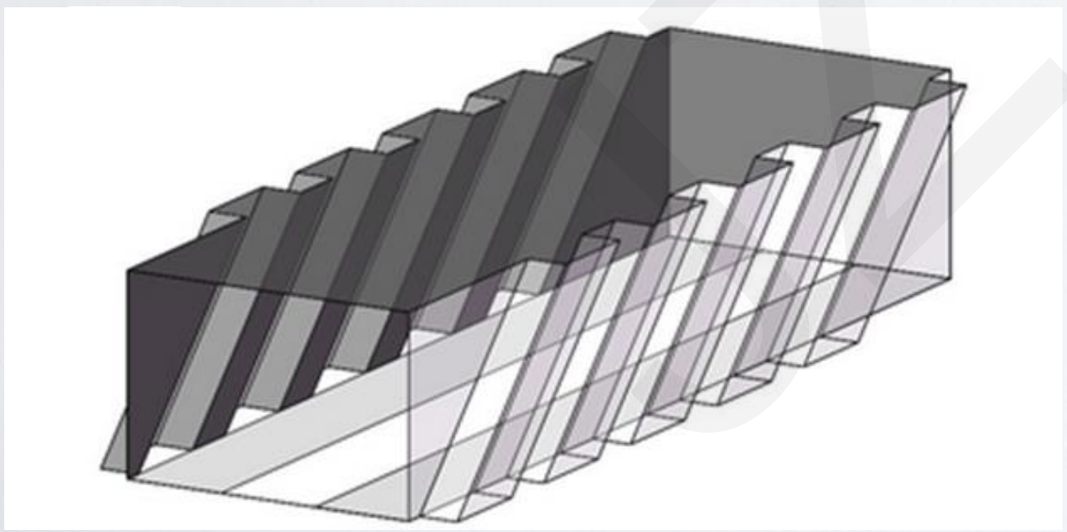

Electrodes on the bottom wall, N2

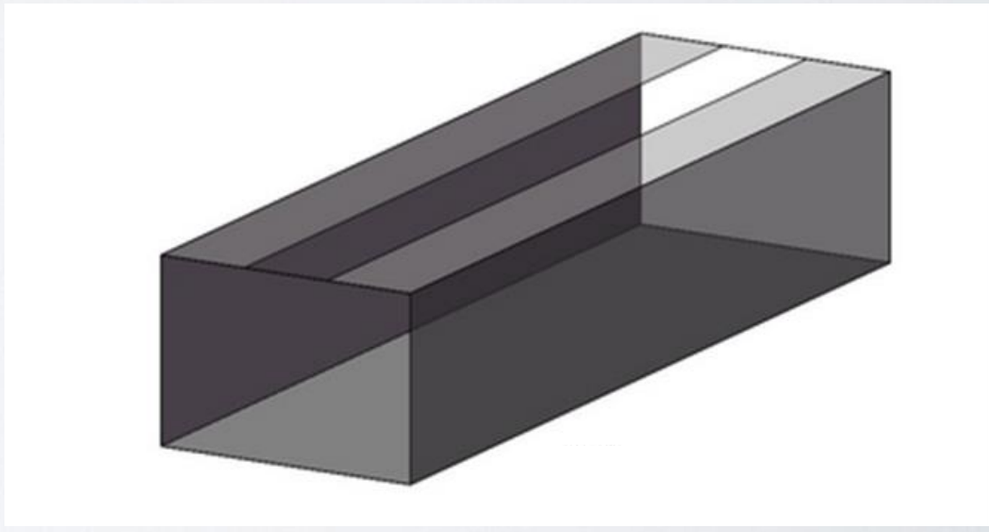

Grooveless microfluidic fuel cell, N3

Research method

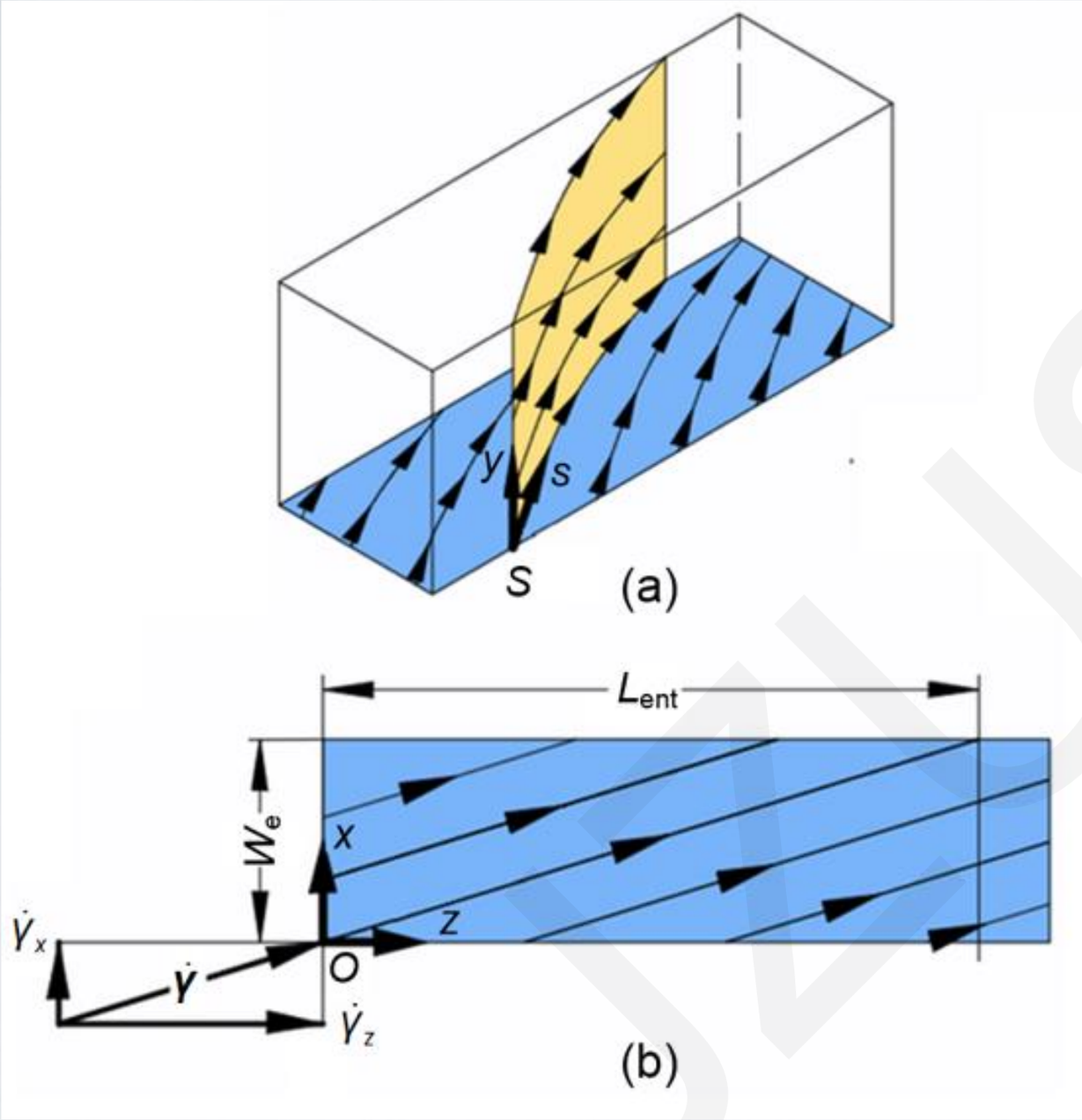

$$v_s = \dot{\gamma}(s)\, y,$$

$$v_y = -\frac{1}{2}\dot{\gamma}'(s)\, y^2,$$

$$v_s \frac{\partial c}{\partial s} + v_y \frac{\partial c}{\partial y} = D \frac{\partial^2 c}{\partial y^2}.$$

$$c = \frac{c_0}{\Gamma(4/3)} \int_0^{\xi} \exp\left(-t^3\right) \mathrm{d}t,$$

$$\xi = \frac{y\sqrt{\dot{\gamma}(s)}}{\left(9D\int_0^s \sqrt{\dot{\gamma}(\eta)}\,\mathrm{d}\eta\right)^{\frac{1}{3}}}, \quad y > 0,\ s > 0,$$

- **To facilitate a deeper understanding of the mass transfer process in microfluidic fuel cells that integrate SGMs, a simplified mass transfer model is developed in the present study.**

Numerical results： flow patterns and boundary layer in the N1 and N2 designs

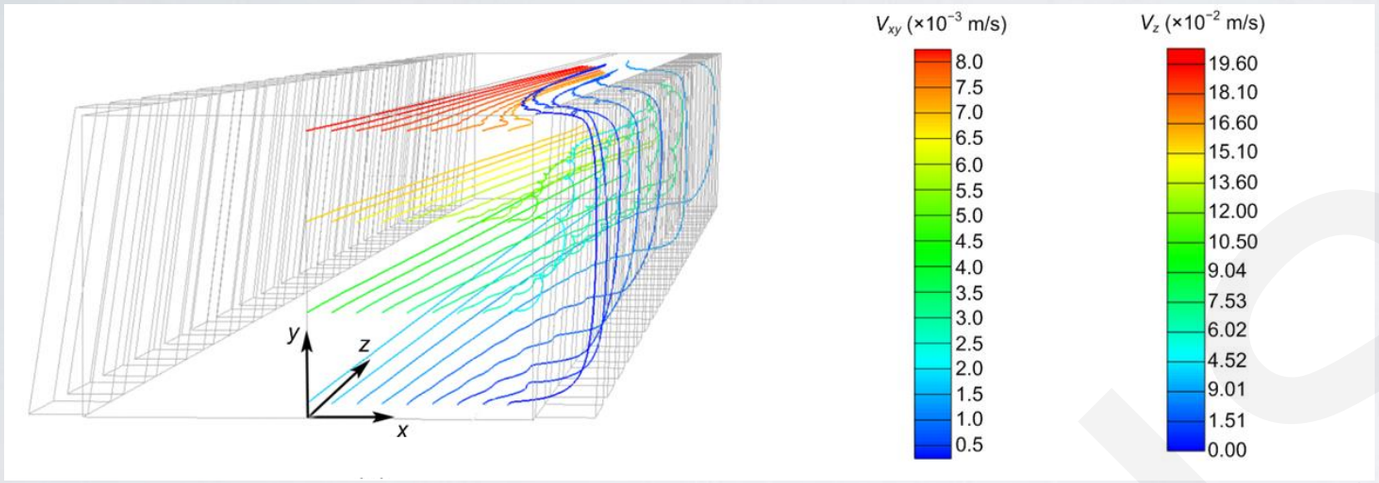

- A clockwise helical flow pattern forms in the oxidant stream in the N1 and N2 designs, promoting the development of the mixing region near the bottom and suppressing the development of the mixing region near the top wall.

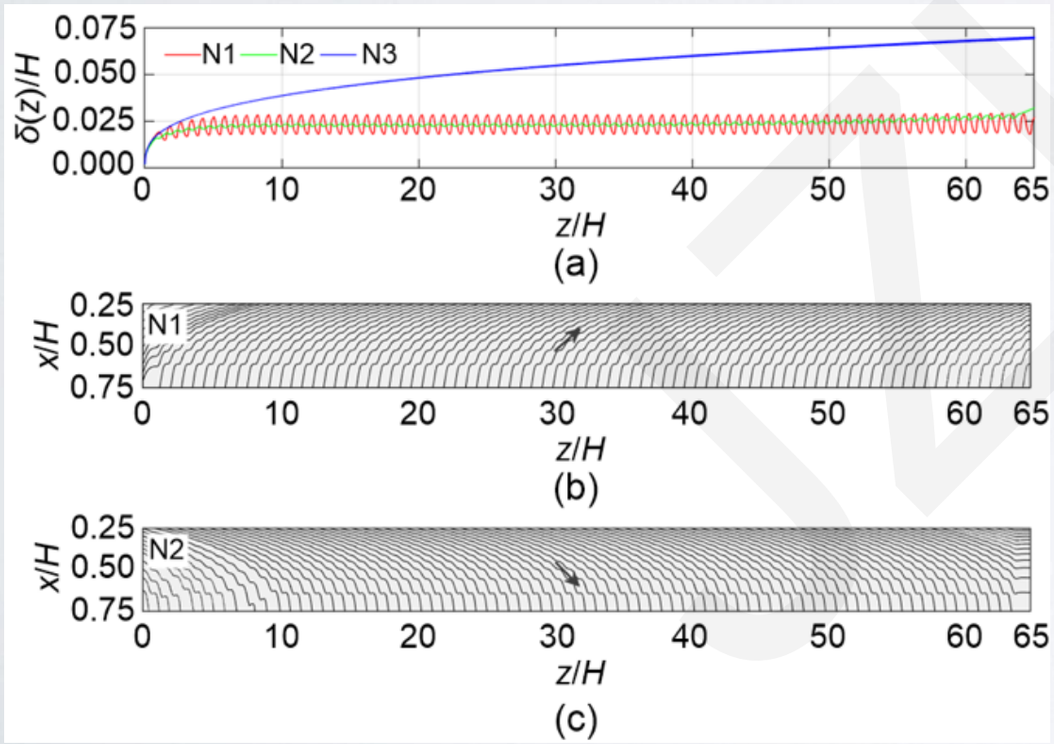

Boundary layer

- While the depletion boundary grows constantly along the channel in the N3 design, the growth of the depletion boundary layer in the N1 and N2 designs is terminated at a short distance from the channel

Numerical results：calculated limiting current density

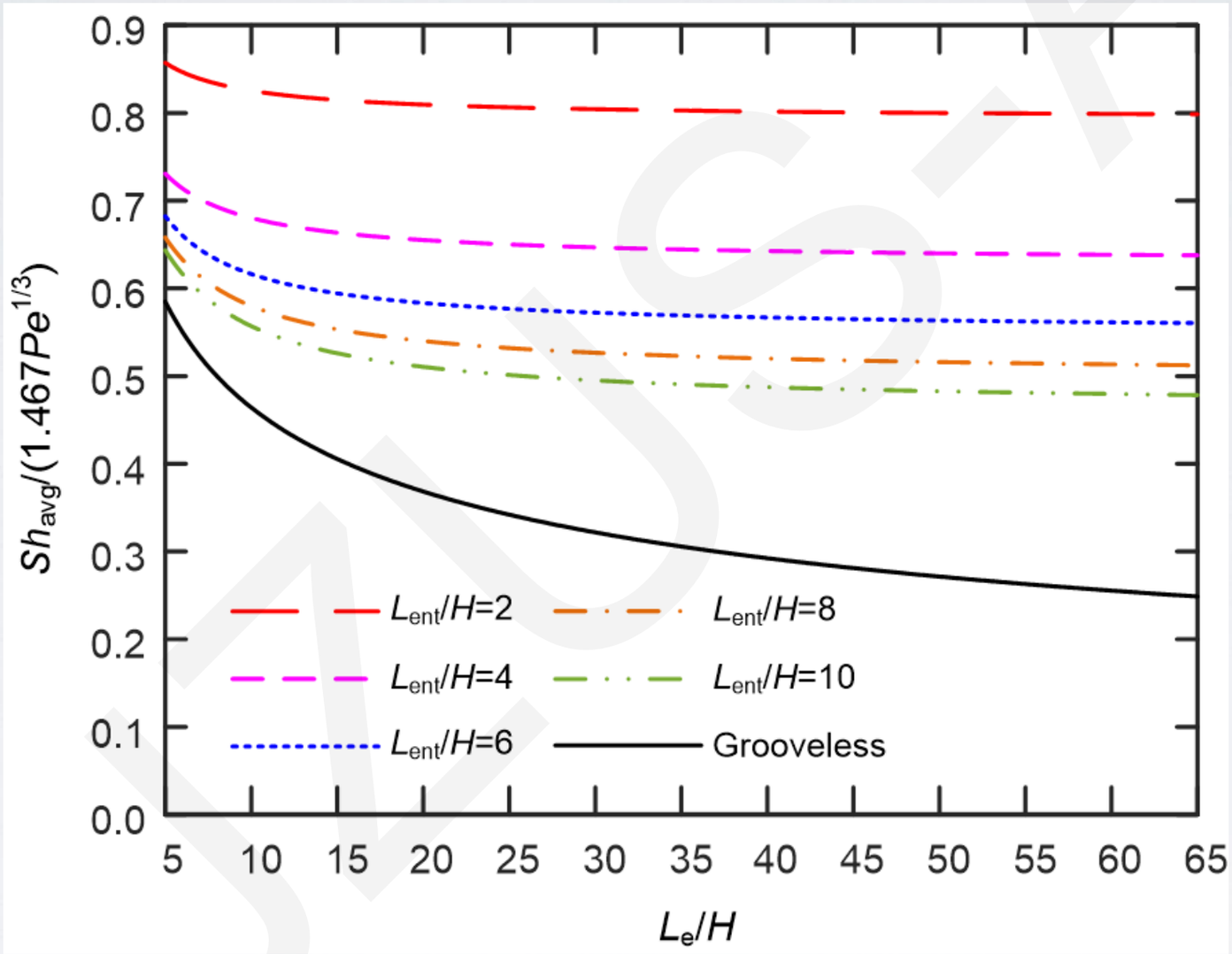

- **Effects of the design parameters on the limiting current density as predicted by the dimensionless correlation**

Innovations and Findings

- **A simplified mass transfer model capable of modeling the mass transfer process with the presence of the transverse secondary flow is developed.**

- **A dimensionless correlation is derived to analyze the effects of the design parameters on the limiting current density.**

- **Numerical modeling on the design of groove micro-mixers and grooveless design demonstrates a mass transfer enhancement that has a 115% higher limiting current density and well-controlled convective mixing between the oxidant and the fuel streams with the use of slanted groove micro-mixers.**

- **The growth of the thickness of the depletion boundary layer is found to be terminated within approximately 2 mm from the channel entrance, which is distinct from the constantly growing pattern in the grooveless design.**