Journal of Zhejiang University-SCIENCE A (Applied Physics & Engineering)

Effect of streamlined nose length on aerodynamic performance of high-speed train with a speed of 400 km/h

Nianxun LI, Tian LI, Zhiyuan DAI, Deng QIN, Jiye ZHANG

Cite this as: Nianxun LI, Tian LI, Zhiyuan DAI, Deng QIN, Jiye ZHANG, 2024. Effect of streamlined nose length on aerodynamic performance of high-speed train with a speed of 400 km/h. *Journal of Zhejiang University-SCIENCE A (Applied Physics & Engineering)*, 25(7):525-540.
https://doi.org/10.1631/jzus.A2300301

Calculation Models

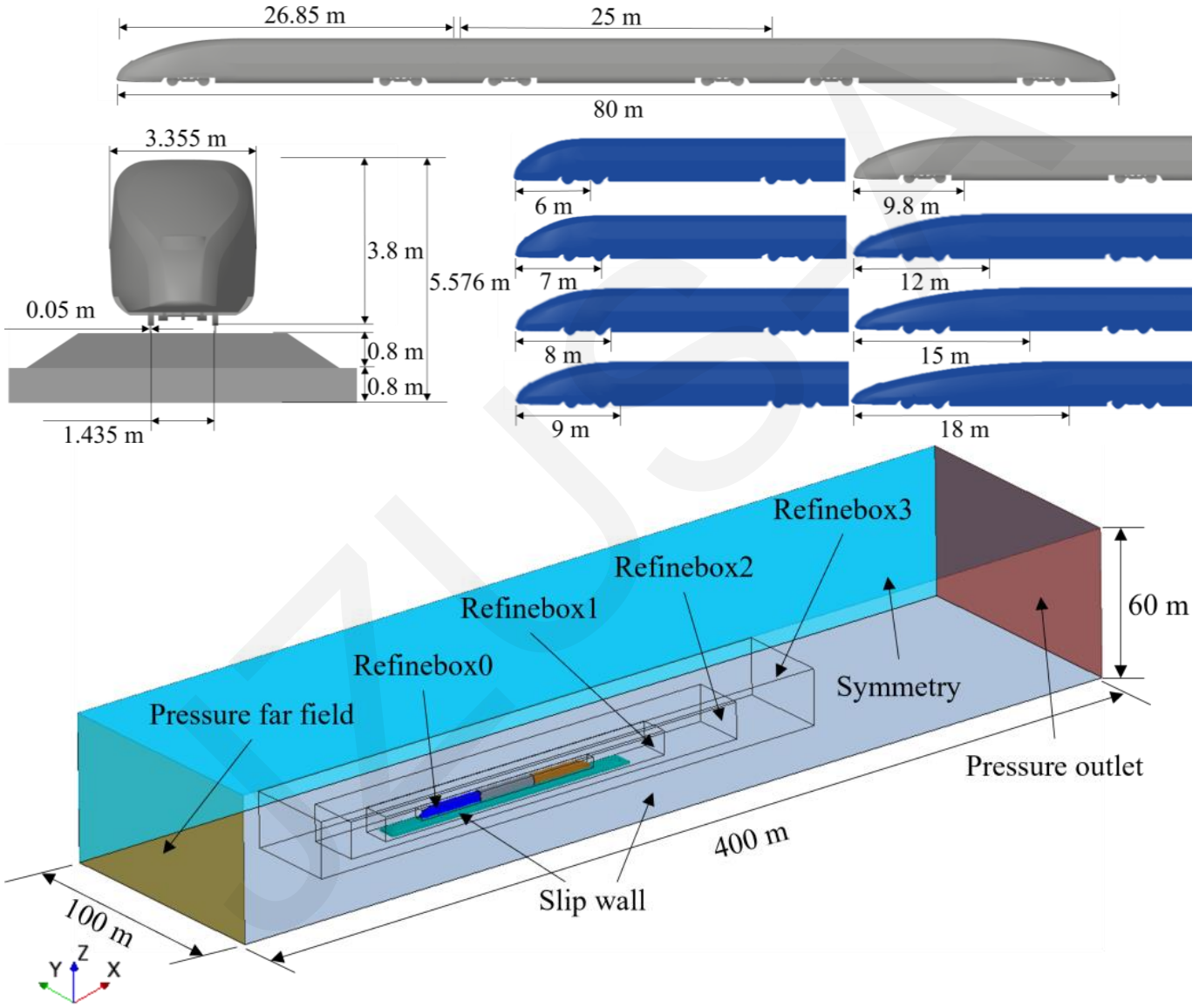

Fig. 1. Train models and the calculation conditions.

Validation of Wind Tunnel Test

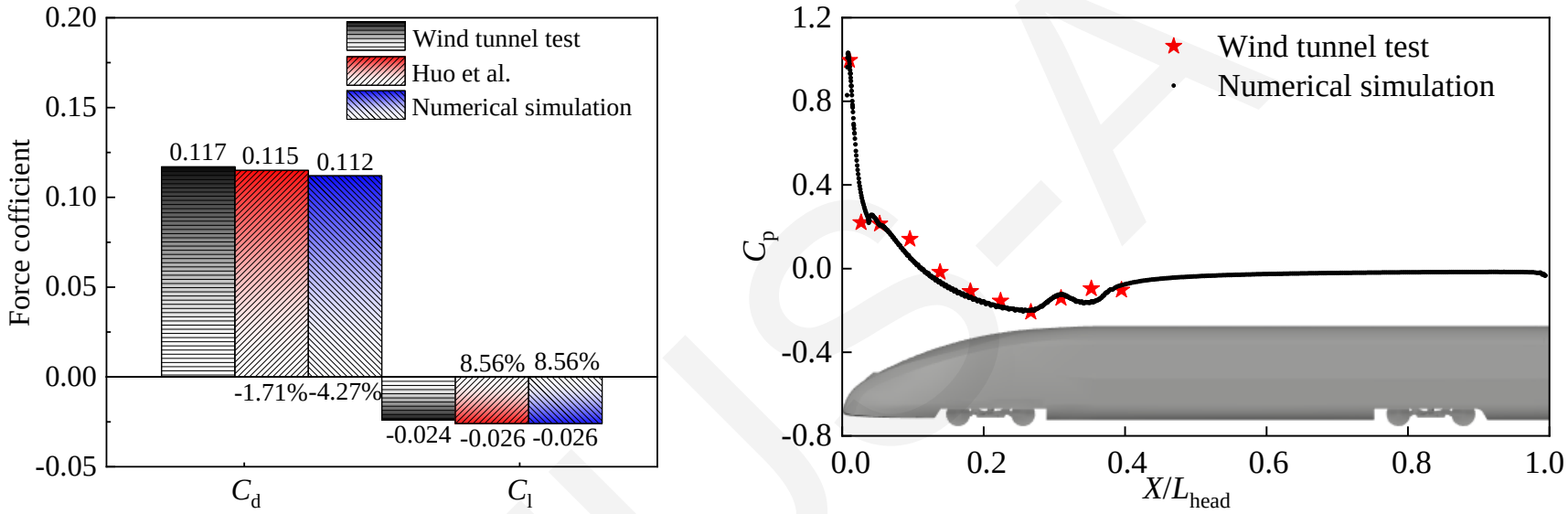

Fig. 2. Comparison of wind tunnel test and numerical simulation results.

Fig. 2 shows comparison of data from wind tunnel tests and numerical simulations. There is little difference between the experimental and simulated aerodynamic characteristics. It can be concluded that the numerical simulation method used in this study yields reliable and accurate results.

Simulation results

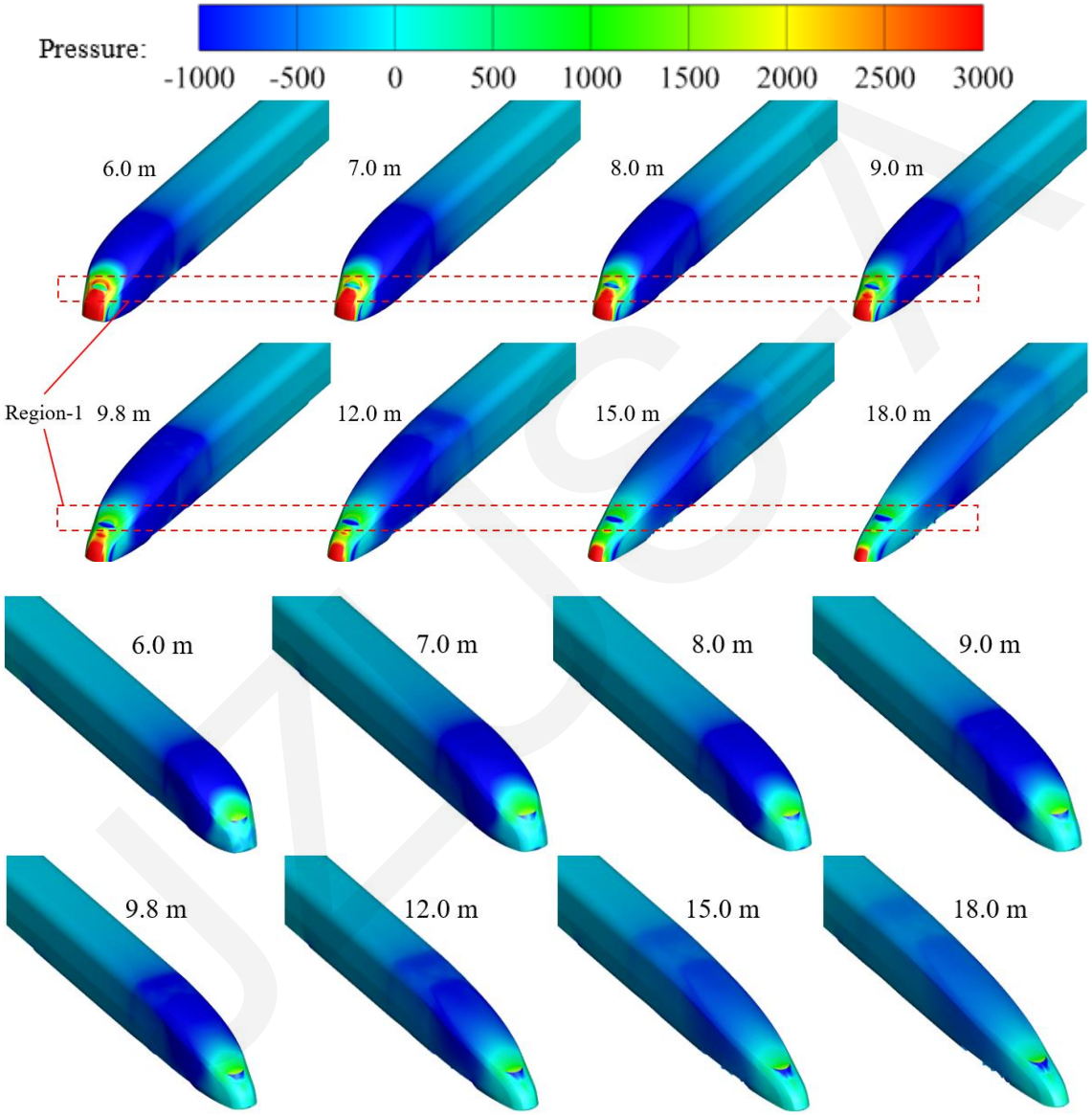

Fig. 3. Comparison of aerodynamic pressure on the head and tail car with different streamline lengths.

Simulation results

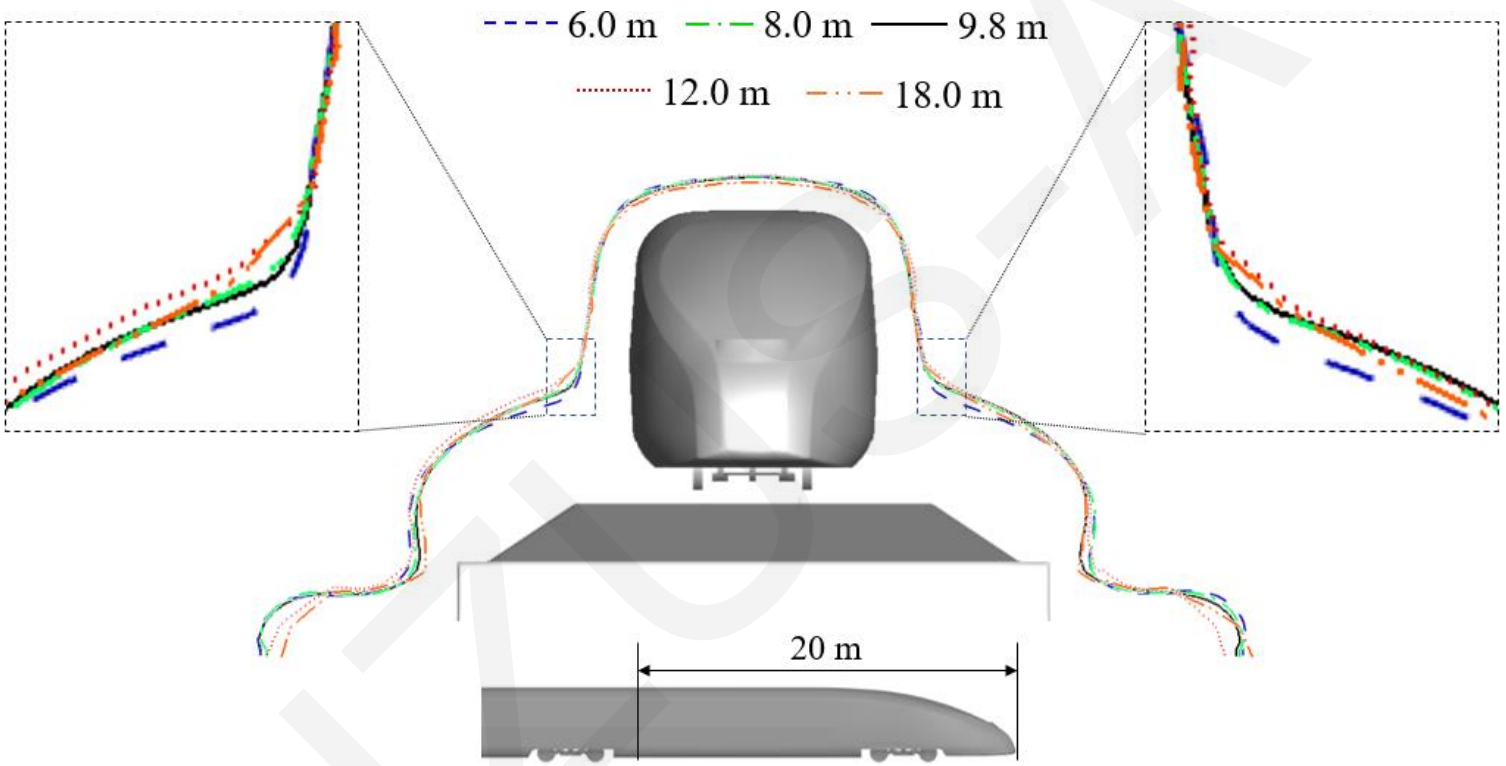

Fig. 4. Velocity boundary layer thickness for different streamlined nose lengths.

Simulation results

Table 1 Aerodynamic coefficients of trains with different streamlined nose lengths.

SNL	C_d	$C_{l\text{-head}}$	$C_{l\text{-tail}}$
6.0 m	0.3252	-0.0285	0.1636
7.0 m	0.3135	-0.0250	0.1390
8.0 m	0.3071	-0.0249	0.1268
9.0 m	0.3008	-0.0222	0.1062
9.8 m	0.2935	-0.0210	0.0932
12.0 m	0.2776	-0.0196	0.0721
15.0 m	0.2611	-0.0188	0.0550
18.0 m	0.2520	-0.0164	0.0469

The predictive formulas for train resistance and tail car lift coefficient can be obtained by using first-order and second-order polynomial fitting. C_d and $C_{l\text{-tail}}$ are the drag coefficient of the whole train and the lift coefficient of the tail car.

$$C_d = C_{d\text{-head}} + C_{d\text{-tail}} + C_{d\text{-mid}} = (-0.0061x + 0.2944) + 0.0619$$

$$C_{l\text{-tail}} = 0.00093x^2 - 0.0318x + 0.3186$$

Conclusions

- Increasing the streamlined nose length (SNL) can effectively reduce the resistance of the entire vehicle and the lift of the head and tail car.
- When the SNL is reduced from 9.8 m to 6 m, the train experiences an increase of 10.8% in aerodynamic drag. Additionally, the lift forces on the head car and tail car are increased by 35.7% and 75.5% respectively.
- When the SNL is increased from 9.8 m to 18 m, the train experienced a decrease of 16.5% in aerodynamic drag. The lift forces on the head car and tail car decreased by 21.9% and 49.7% respectively.