Journal of Zhejiang University-SCIENCE A (Applied Physics & Engineering)

Comparative analysis between single-train passing and double-train intersection in a tunnel

Jianming DU, Qian FANG,
Xuan ZHANG, Hualao WANG

Cite this as: Jianming DU, Qian FANG, Xuan ZHANG, Hualao WANG, 2024. Comparative analysis between single-train passing and double-train intersection in a tunnel. *Journal of Zhejiang University-SCIENCE A (Applied Physics & Engineering)*, 25(5):429-442.
https://doi.org/10.1631/jzus.A2300339

JZUSA

Methodology

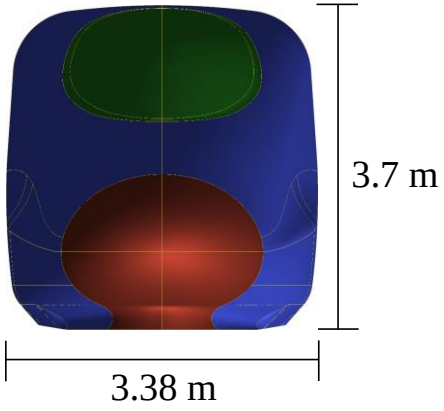

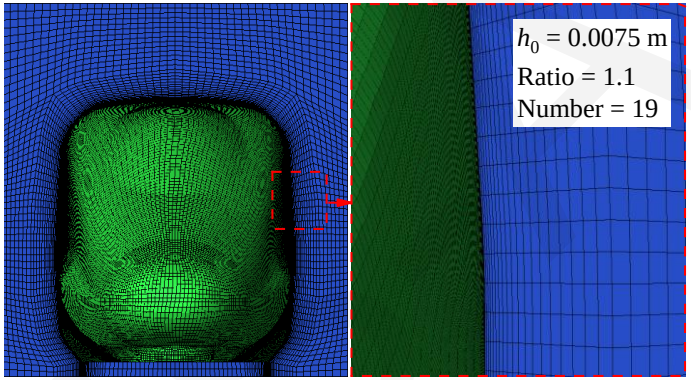

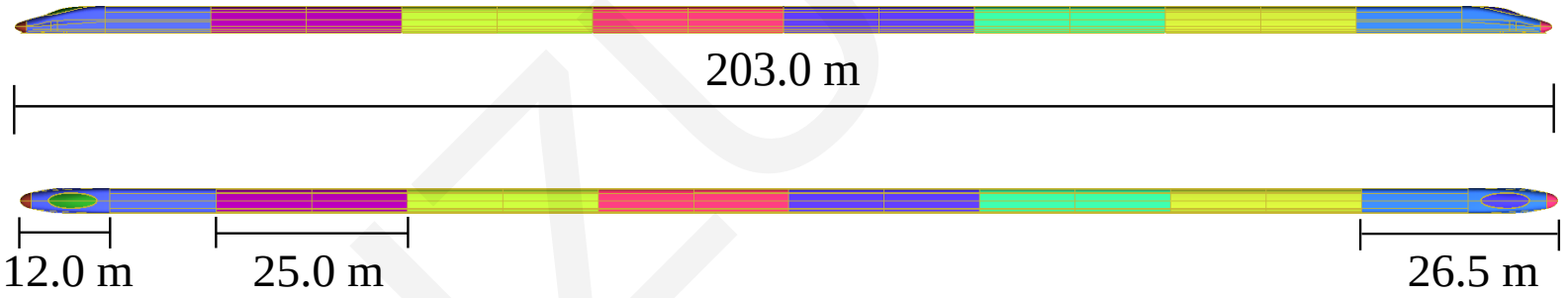

Train model

Methodology

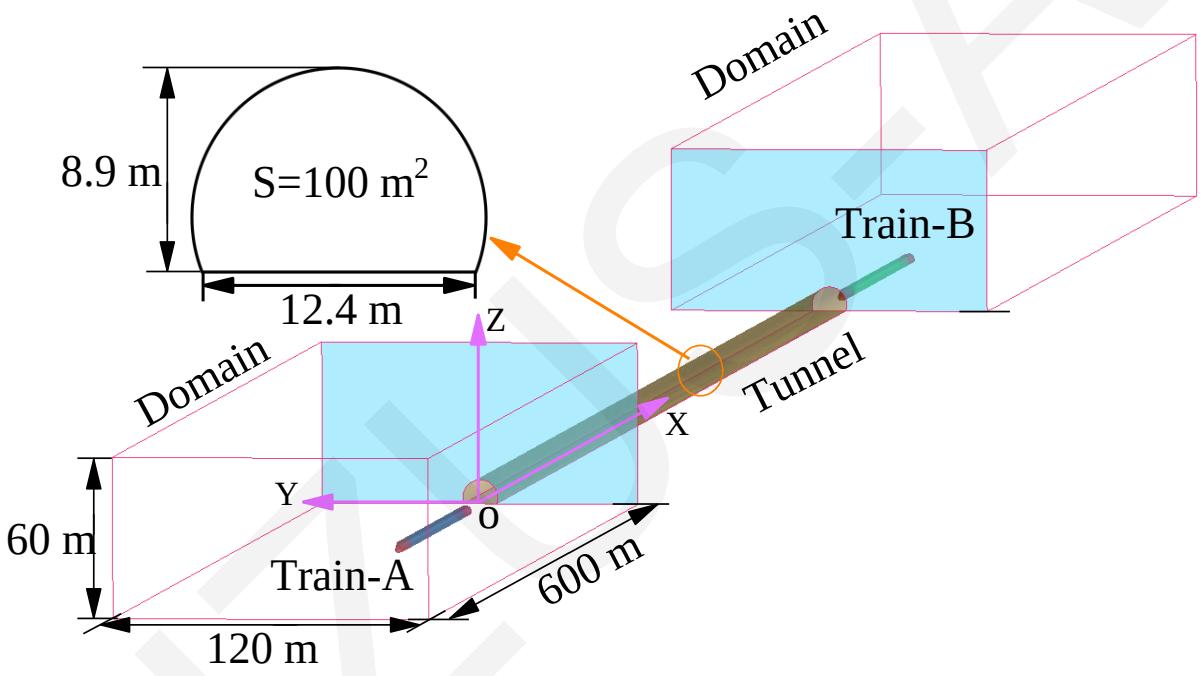

Computational domain

Methodology

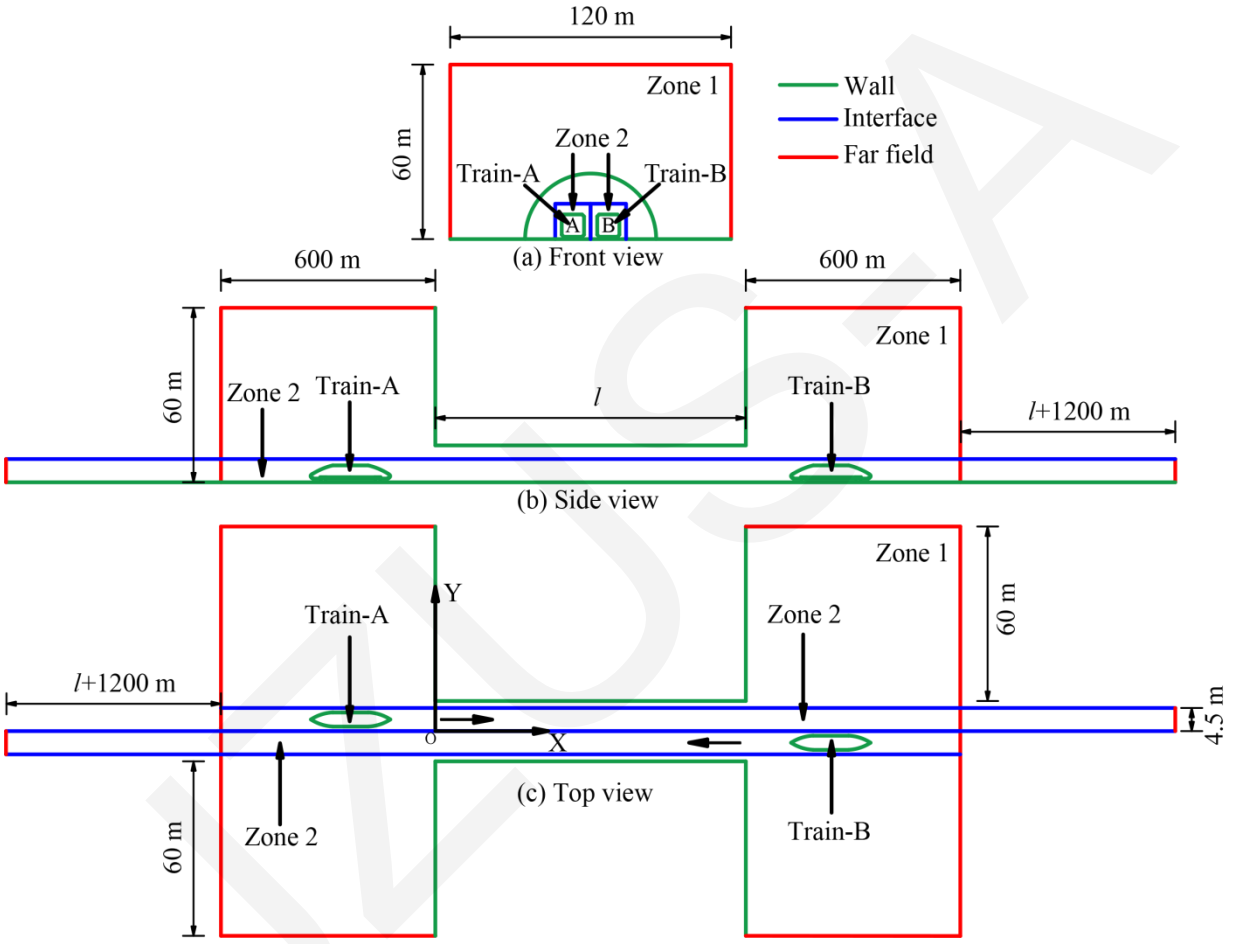

Boundary conditions

Validation

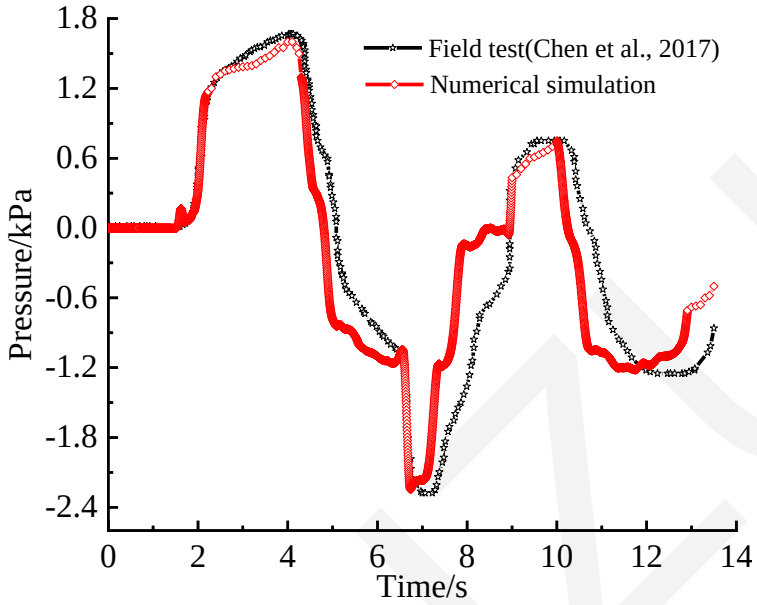
Field test(Chen et al., 2017)
Numerical simulation
Pressure/kPa
Time/s
1.8
1.2
0.6
0.0
-0.6
-1.2
-1.8
-2.4
0
2
4
6
8
10
12
14

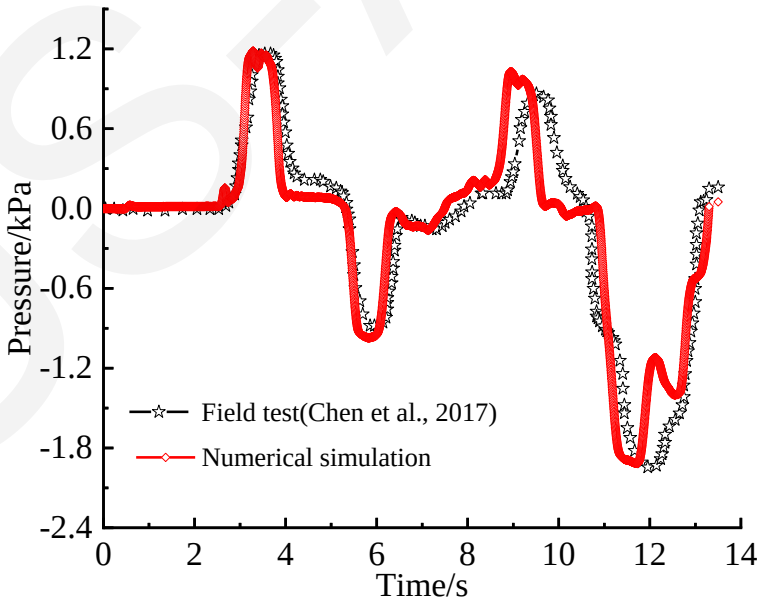
Field test(Chen et al., 2017)
Numerical simulation
Pressure/kPa
Time/s
1.2
0.6
0.0
-0.6
-1.2
-1.8
-2.4
0
2
4
6
8
10
12
14

Results

Relationship between the wave diagram in the tunnel and pressure variation for computed condition

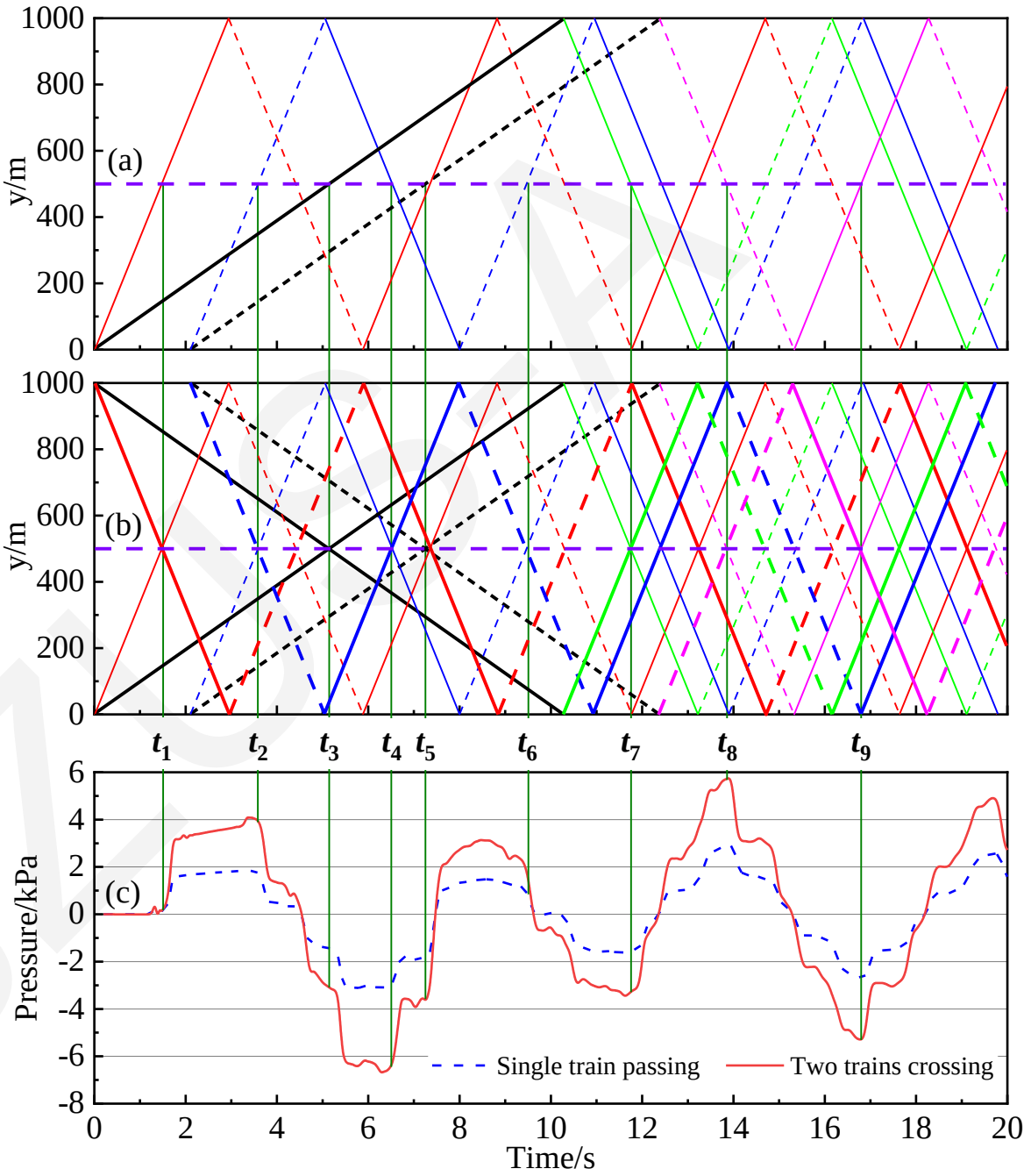

Results

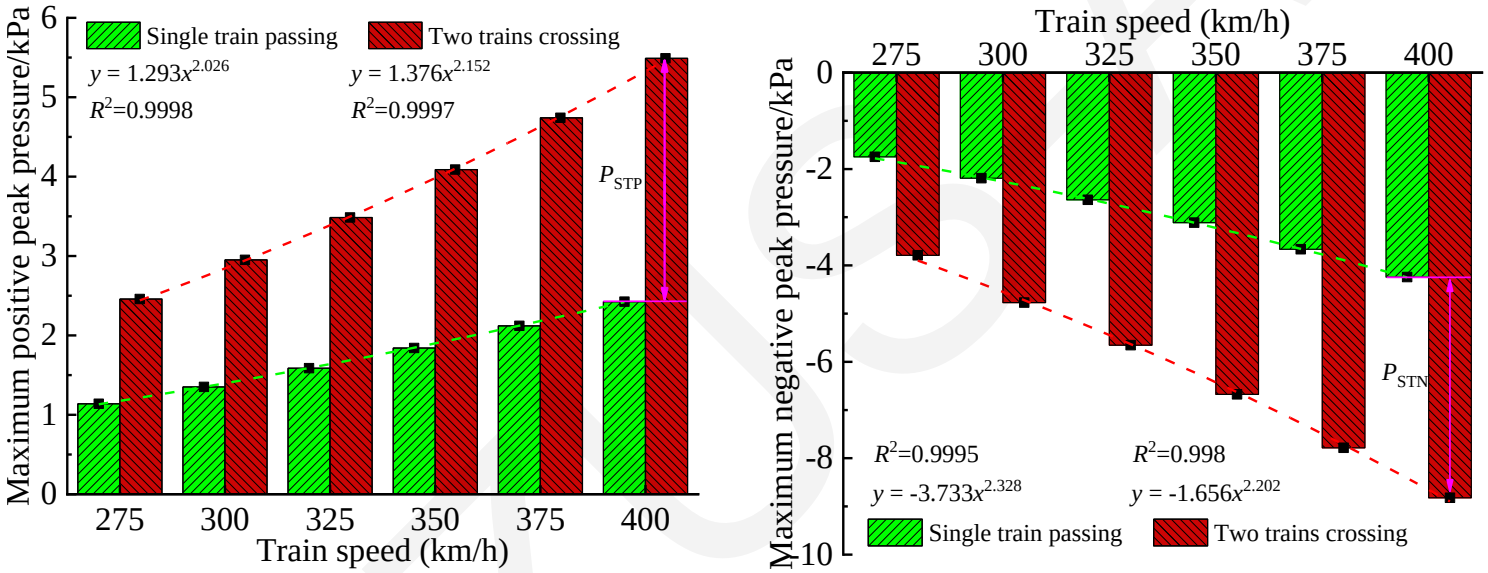

Histogram of maximum peak pressure in the tunnel's longitudinal middle section at different train speeds in Stage

Results

Aerodynamic pressure variation can be divided into Stage I and Stage II, according to the change trend of the time-history curve. Stage I corresponds to irreg-ular pressure fluctuations before the train tail leaves the tunnel exit, and Stage II corresponds to periodic pressure decline after the train tail leaves the tunnel exit. The aerodynamic pressures jump or drop sim-ultaneously for both single-train and two-train cases. The pressure amplitude of the positive and negative peak values in the two-train case is larger than that in the single-train case.