Journal of Zhejiang University-SCIENCE A (Applied Physics & Engineering)

Mechanical properties of segmental joints strengthened by assembled reinforcement structures for shield tunnel linings

Zhiguo YAN, Sihang AI, Xia YANG, Long ZHOU,
Bing FAN, Huan PANG

Cite this as: Zhiguo YAN, Sihang AI, Xia YANG, Long ZHOU, Bing FAN, Huan PANG, 2024. Mechanical properties of segmental joints strengthened by assembled reinforcement structures for shield tunnel linings. *Journal of Zhejiang University-SCIENCE A (Applied Physics & Engineering)*, 25(12):1037-1050. https://doi.org/10.1631/jzus.A2300455

New Reinforcement Structure Design

- Add steel plates inside the tunnel structure is one of the common reinforcement strategies to improve the structural stiffness and bearing capacity
- Covering the internal surface of segmental linings and causing difficulties in the observation of water leakage, concrete cracking, and other undesirable effects

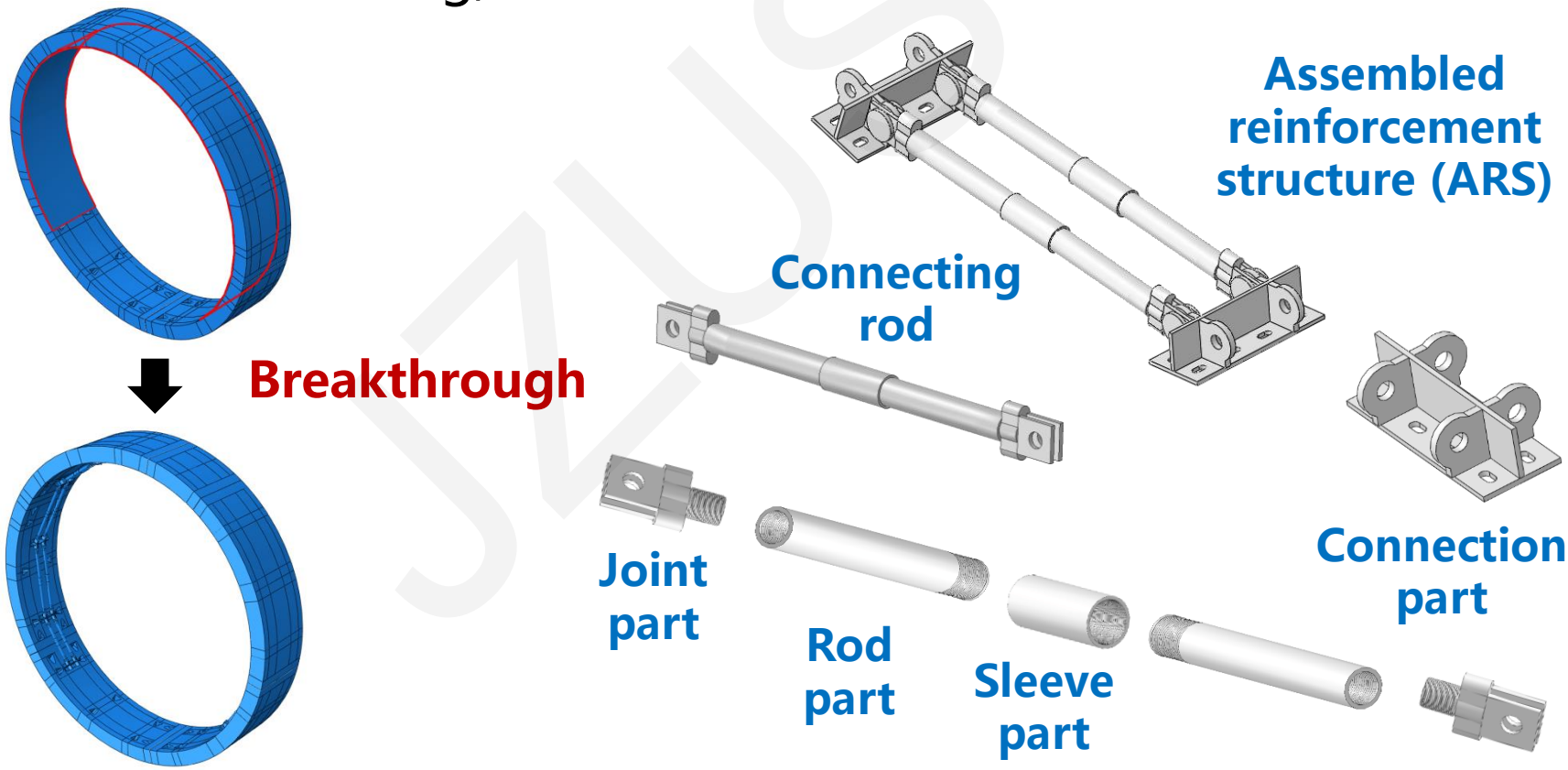

JZUSA

Advantages

- ARSs can be installed at joints to restrict the amount of opening without covering the lining surface
- The installation of ARSs is simple and convenient since ARSs can be easily replaced, and their production components can be standardized



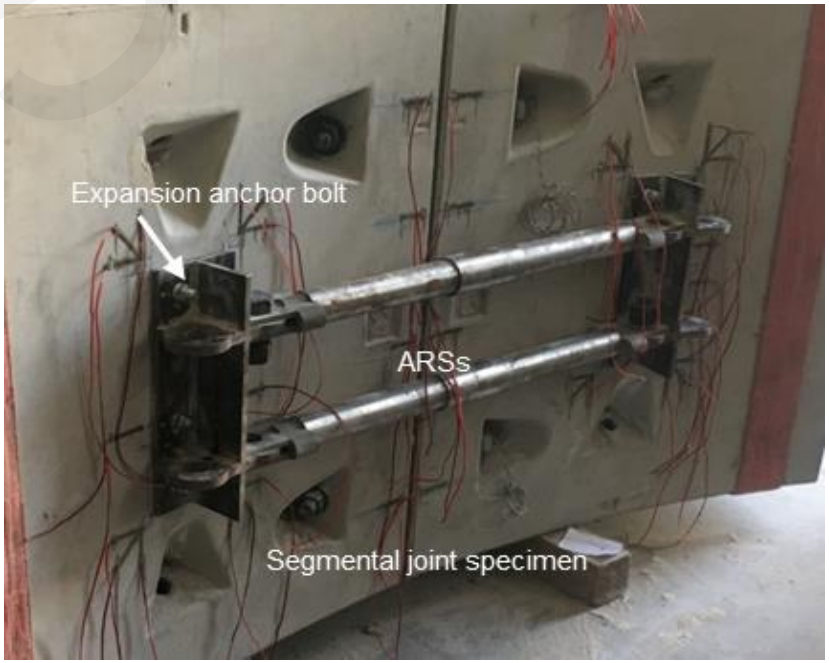

Verification

- While an un-strengthened segmental joint failed with an opening of 5.48 mm, the opening of the strengthened joint was only 1.50 mm under the same loading, with a reduction of 72.6%
- However, ARSs can also separate from the concrete segments if the connection is not designed properly











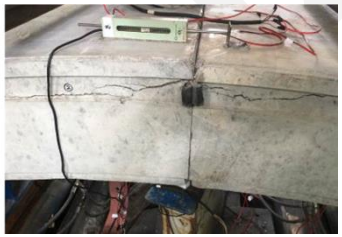





Optimization

- Anchor parts are used to strengthen the connections between the ARSs and concrete segments

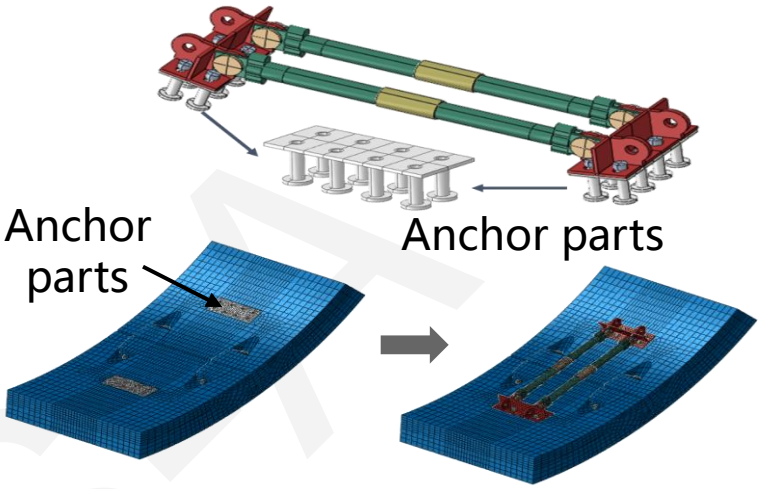

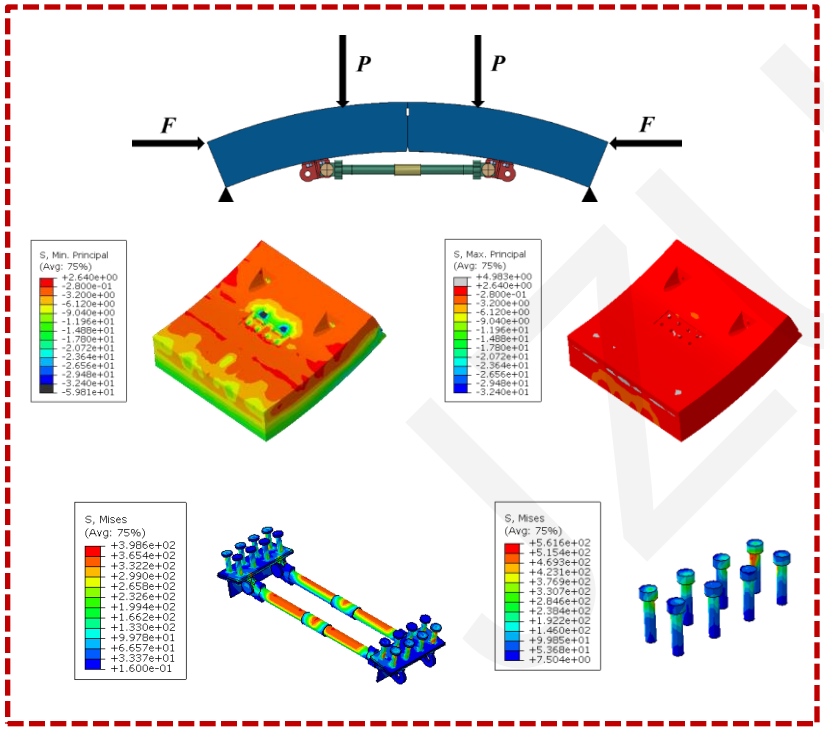

Under positive bending moment, joint opening reduction of 95.1%

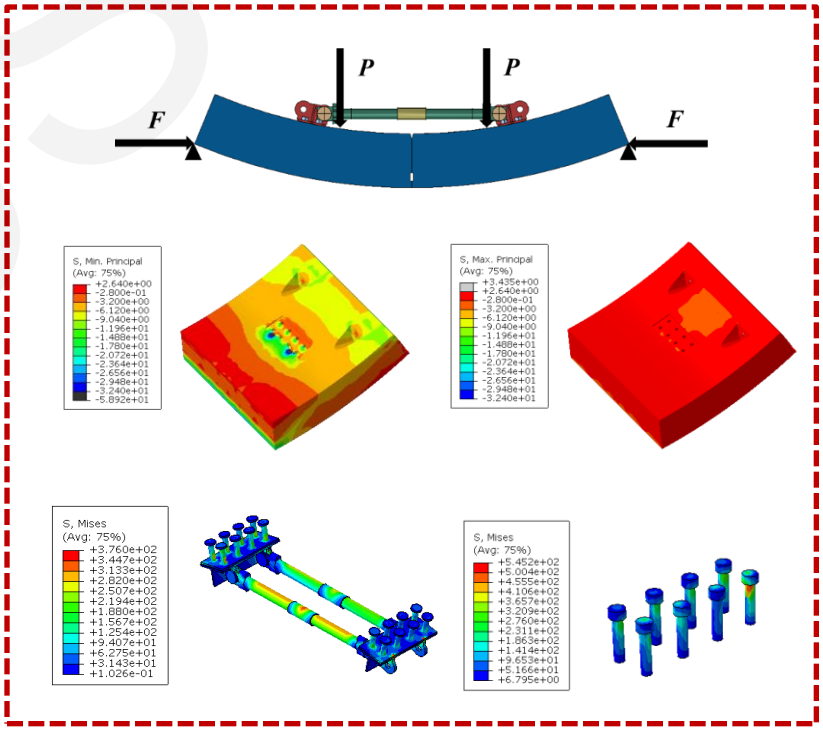

Under negative bending moment, joint opening reduction of 69.1%

Conclusions

- The amount of joint opening can be limited by ARSs. However, ARSs can separate from the concrete segments if the connection is not designed properly. It is necessary to optimize the connection between the ARSs and the concrete segments.
- Anchor parts are used to strengthen the connections between the ARSs and concrete segments as the optimization method. Under the action of positive and negative bending moments, the opening in the strengthened segmental joints decreases by 95.1% and 69.1%, respectively.
- When constructing a new shield tunnel, anchor parts could be embedded in the concrete segments in tandem with ARSs for improved resistance to joint opening.