Journal of Zhejiang University-SCIENCE A (Applied Physics & Engineering)

Design and performance study on adaptive sealing of a dry cabin for maintenance of submarine pipeline

Cite this as: Jin GUO, Xinghui TAN, Hai ZHU, Jiawang CHEN, Shidi JIN, Yuanjie CHEN, Jie CHEN, Ruiduo YIN, 2024. Design and performance study on adaptive sealing of a dry cabin for maintenance of submarine pipeline. *Journal of Zhejiang University-SCIENCE A (Applied Physics & Engineering)*, 25(11):908-921. https://doi.org/10.1631/jzus.A2300507

Introduction

- Submarine pipelines are essential for offshore oil and gas field development, but they face a high failure probability due to harsh marine conditions. Traditional repair methods, such as sea-surface dry repair and underwater wet repair, are costly and labor-intensive, with the latter often resulting in poor welding quality. To address these issues, a dry repair method utilizing a dry cabin has been proposed.
- Fig. 1. shows the dry cabin. The cabin consists of a top-half cabin and two bottom-quarter cabins. When the pipe has a bend angle, the arc section of the dry cabin is not coaxial with the pipe (the pipe appears eccentric), resulting in uneven compression of the seal strip in the arc section.
- Propose an adaptive seal between the dry cabin and the pipe, and the sealing characteristics of airbags are mainly discussed.

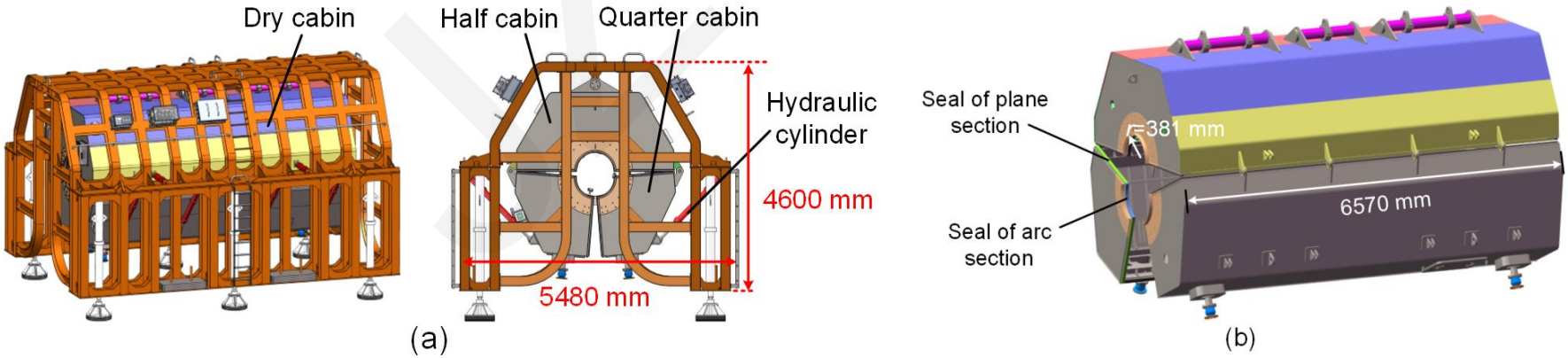

Fig. 1. (a) Diagram of the dry cabin; (b) schematic diagram of the sealing type of the dry cabin

Method

- Use ABAQUS finite element software to study the effect of the physical characteristics of an airbag on its sealing performance. Investigated the adaptive sealing mechanism under time-varying gap conditions.

- (1) Uniaxial tests were carried out to obtain the stress–strain constitutive model of a silica gel airbag;
- (2) ABAQUS was used to analyze the sealing and force characteristics of sealing airbags with five kinds of cross-section shapes;
- (3) Under the constant-gap working conditions, the influences of material hardness, wall thickness, and inflation pressure on the deformation, mechanical, and sealing characteristics of the airbag were studied;
- (4) The sealing characteristics of the selected airbag were studied under time-varying gap conditions, and the adaptive sealing mechanism of the airbag was evaluated;
- (5) A full-scale airbag pressure test was carried out to verify the rationality of the simulation results.

JZUSA

Results and discussion

Influence of cross-section on sealing performance

- The peak values of contact stress generated by airbags with different cross-sections are significantly different. The contact surface at the top of the S2 and S4 airbags is not flat and generates larger contact stresses. The airbags with other cross-sections had smaller contact stresses due to the other cross-sections.
- The Mises stress of the airbag with S3 is small due to its regular shape and uniform inflation. Therefore, the S3 airbag was selected as the sealing tool for the dry cabin.

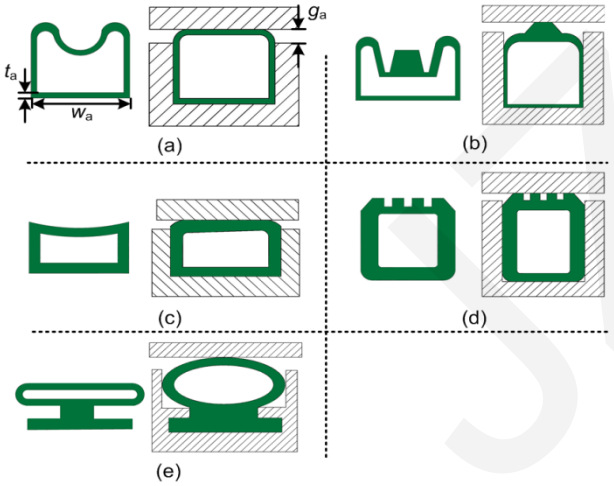

Fig. 2. Sealing airbags with different cross-sections: (a) Section-1; (b) Section-2; (c) Section-3; (d) Section-4; (e) Section-5

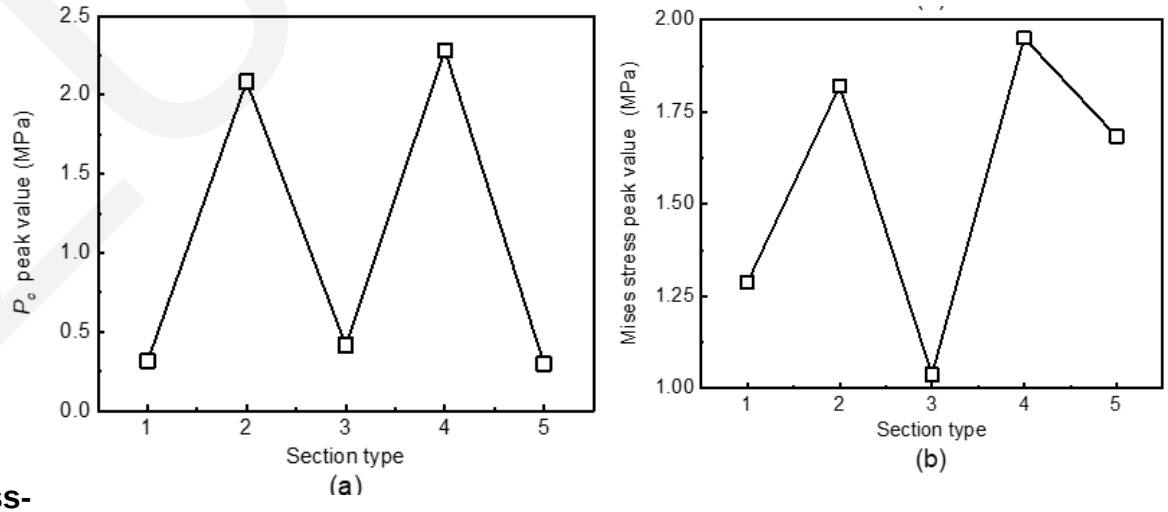

Fig. 3. Uniaxial test results for silica gel with different hardness-es: (a) uniaxial tensile; (b) uniaxial compression

Results and discussion

Influence of airbag hardness on sealing performance

- Take airbag with S3 as the research object and discusses the influence of hardness on airbag sealing characteristics.
- The peak contact stress of the airbag is close to the level of the air pressure, so the hardness of the airbag has almost no effect on the peak contact stress. Airbag hardness had a slight effect on the Mises stress.
- Selected the airbag with a hardness of 60 HA.

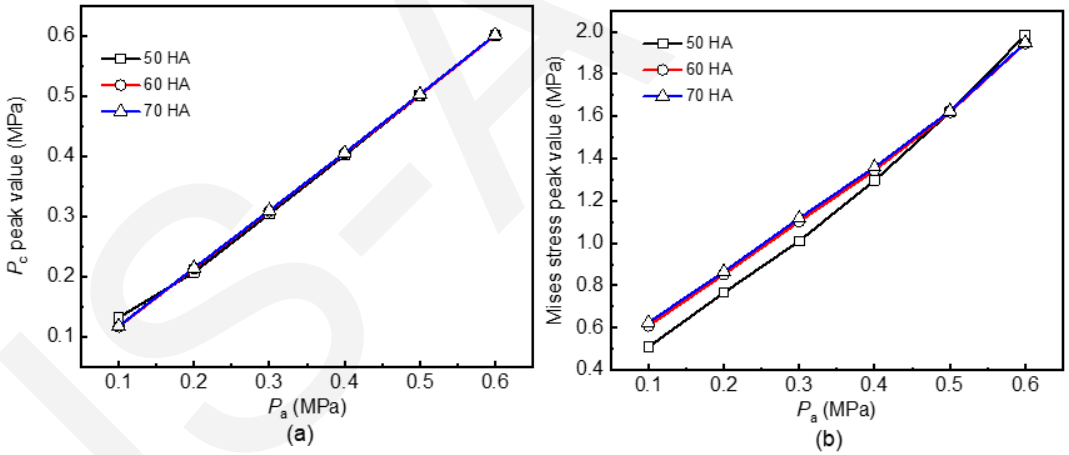

Fig. 4. Mechanical properties of airbags with three levels of hardness under different inflation pressures: (a) contact stress peak; (b) Mises stress peak

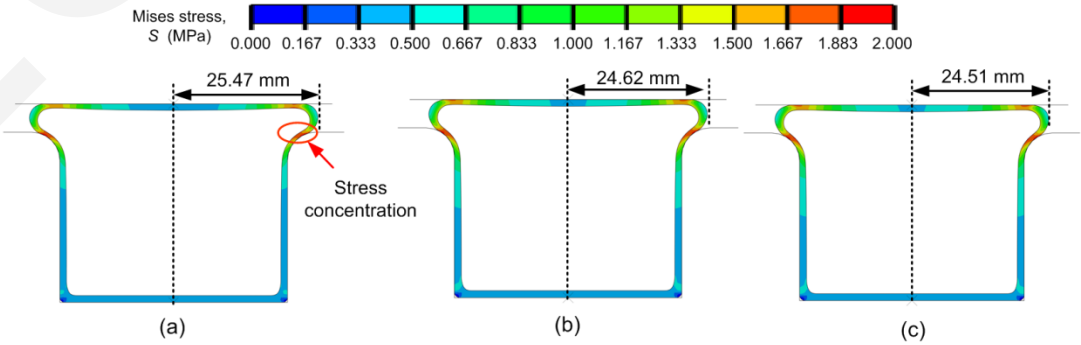

Fig. 5. Mises stress distributions at $P_a = 0.6$ MPa of airbags with three levels of hardness: (a) 50 HA; (b) 60 HA; (c) 70 HA

Results and discussion

Influence of airbag wall thickness on sealing performance

- The larger the thickness of the airbag, the larger the cross-section area, and the smaller the stress under the same air pressure, so the smaller the deformation degree; that is, the smaller the Mises stress peak value.
- The Mises stress peak value showed a more obvious increasing trend with the increase of air pressure when the wall thickness of the airbag was small. The increasing trend tended to be gentle and gradually closed with increasing airbag wall thickness.

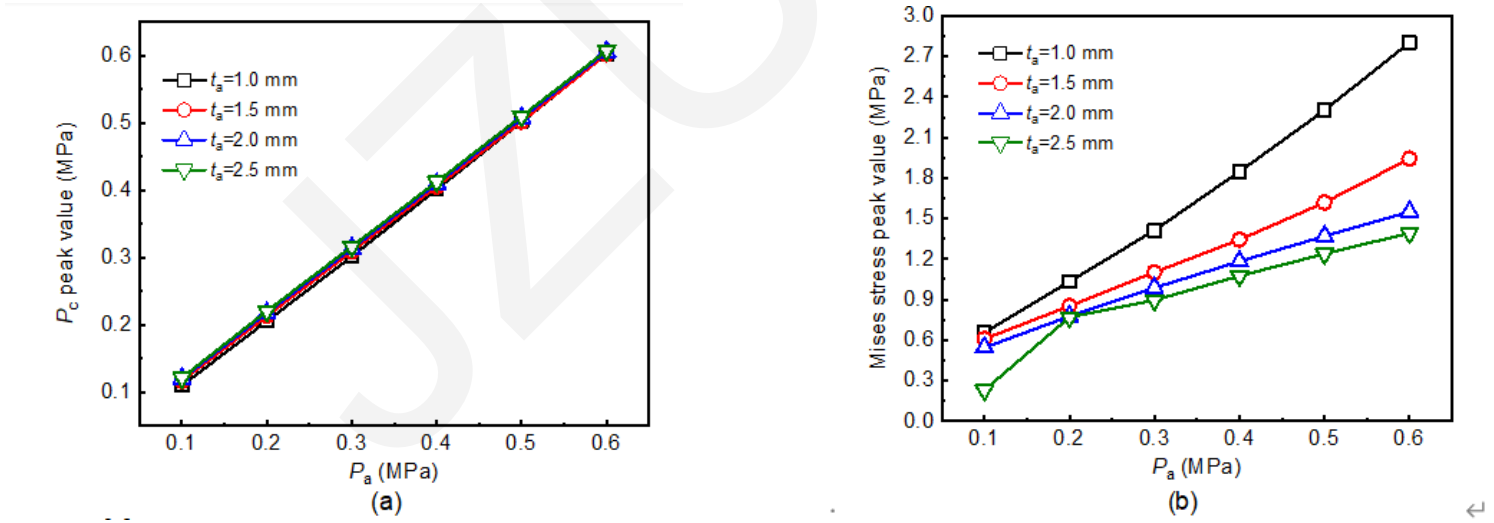

Fig. 6. Mechanical properties of airbags with four wall thick-nesses under different inflation pressures: (a) contact stress peak; (b) Mises stress peak

Results and discussion

Influence of airbag wall thickness on sealing performance

- The maximum contact stress of the airbag is on both sides of the contact surface, which is different from the contact stress distribution of the O-ring.
- With increasing wall thickness, the deformation degree of the airbag decreases continuously, and the overall Mises stress of the airbag shows a downward trend. With regard to contact stress and Mises stress, the performance of airbags with large wall thicknesses is better. However, the large wall thickness results in poor ductility of the airbag, and the airbag not being able to expand to fill a larger gap. Thus, we selected the airbag with a wall thickness of 2.0 mm.

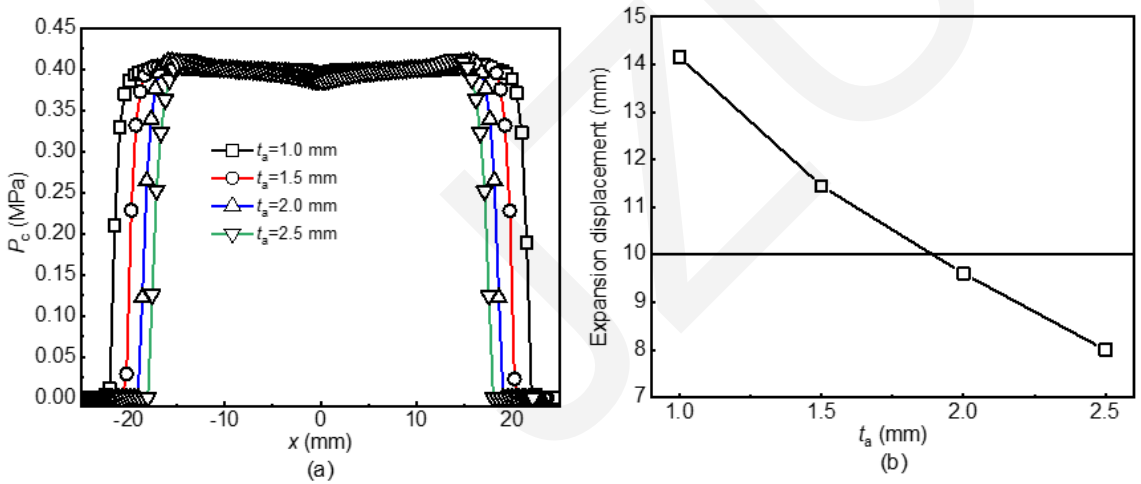

Fig. 7. (a) Contact stress distribution of airbags with four wall thicknesses; (b) expansion displacement of airbags with four kinds of wall thickness in the y direction at $P_a = 0.2$ MPa

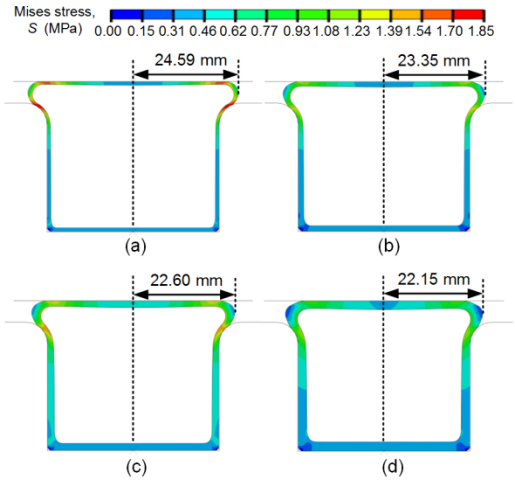

Fig. 8. Mises stress distributions of airbags with four wall thicknesses at $P_a = 0.4$ MPa

Results and discussion

Airbag sealing performance in different gaps

- Because a curved pipe is eccentric relative to the arc section of the dry cabin, the distance (seal gap) between the top surface of the airbag and the pipe will be different in various circumferential positions. Use an airbag with a cross-section of S3, a hardness of 60 HA, and a wall thickness of 2.0 mm.
- The required inflation pressure increases as the gap widens. The increasing trend tends to be flat with the widening of the gap. The Mises stress peak value increased along with airbag expansion, and the trend was similar to that of air pressure. However, the Mises stress of the airbag was less than 1 MPa.

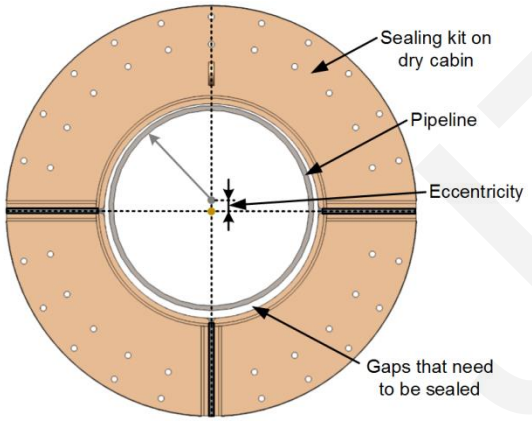

Fig. 9. Diagram of the eccentricity of the pipe relative to the dry cabin

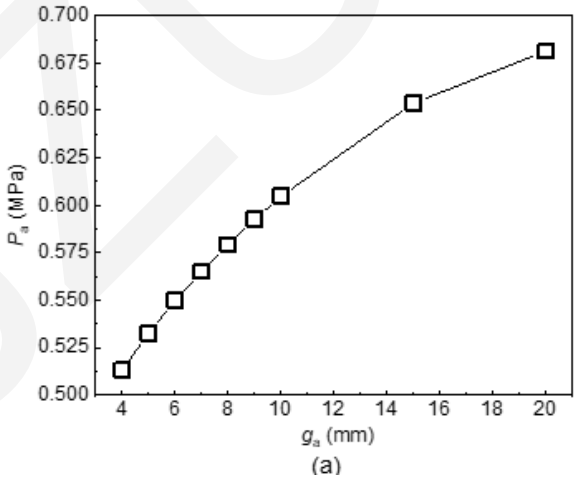

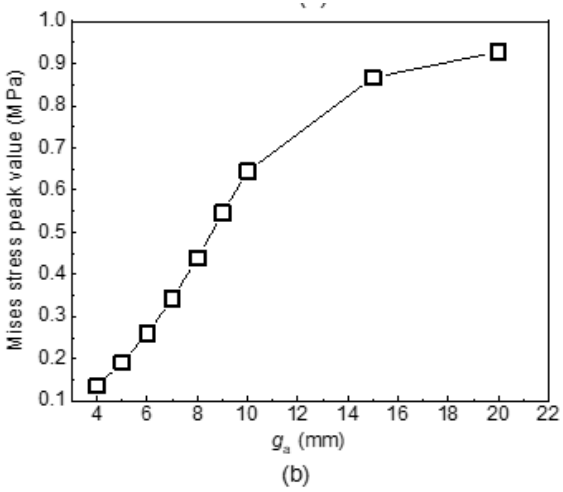

Fig. 10. (a) Air pressures required for the airbag to form a seal under different gap conditions; (b) Mises stress peak values after the airbag formed a seal under different gap conditions

Results and discussion

Airbag test

- The maximum difference between the simulation results and those of the airbag expansion test is only 0.4 mm, and the maximum difference between the pressure results of the airbag and the simulation results is only 3.0%, which indicates that ABAQUS can be used to accurately study the inflation deformation and sealing characteristics of airbags.

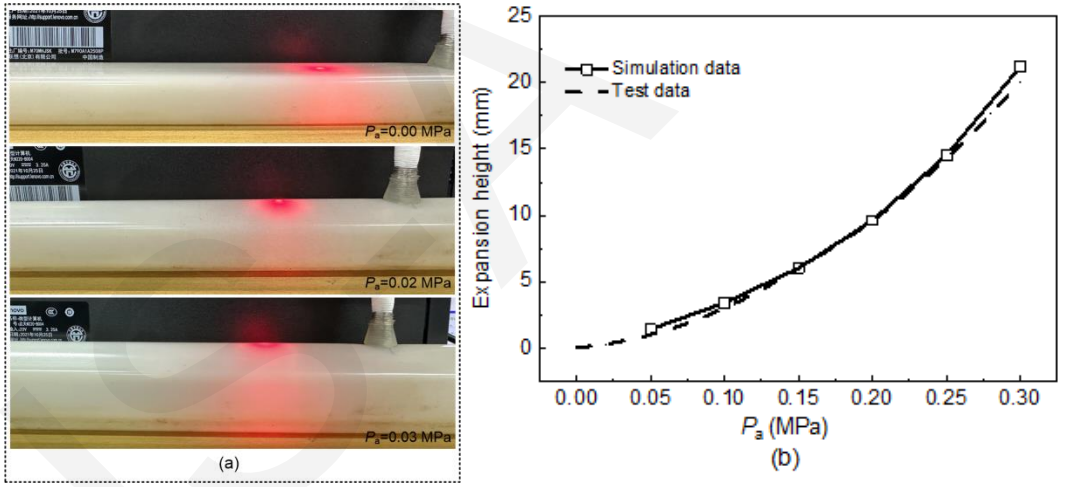

Fig. 11 (a) Diagram of airbag inflation; (b) relationship between airbag inflation height and air pressure.

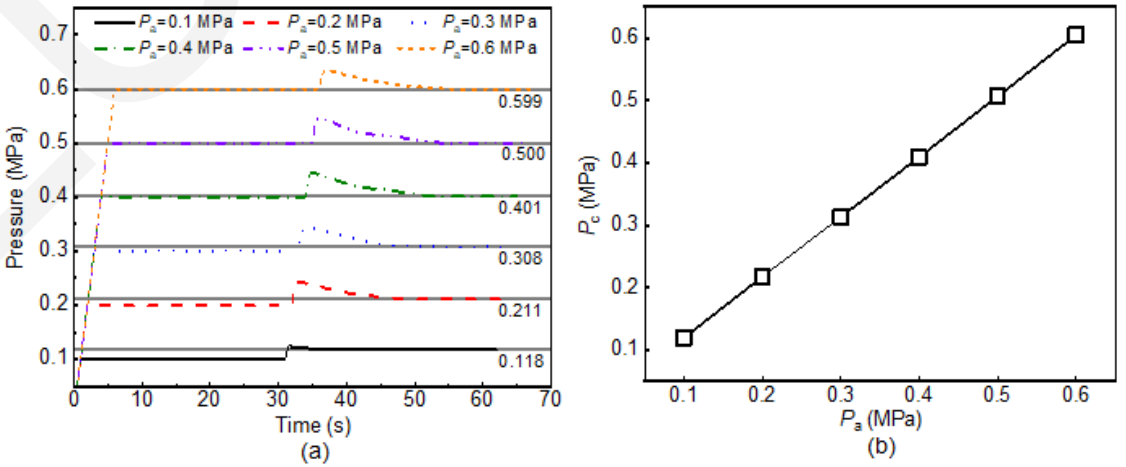

Fig. 12 (a) Pressure-bearing capacity test results of the airbag under different air pressures; (b) simulation results of the peak contact stress generated by the airbag under different air pressures

Conclusions

- Of five cross-section shapes, the rectangular cross-section resulted in the minimum Mises stress under the premise of satisfying the seal, which can improve the safety of airbag operation.
- The peak contact stress of the airbag is close to the level of the air pressure, so the hardness of the airbag has almost no effect on the peak contact stress. Airbag hardness had a slight effect on the Mises stress.
- The contact stress generated by a thicker airbag is greater, so sealing performance increases with wall thickness. Higher wall thickness decreases the deformation degree, and the Mises stress shows a downward trend. However, higher wall thickness results in poorer ductility of the airbag, and an inability to expand to fill larger gaps.
- Under time-varying gap conditions, as the gap widens, the required gas pressure also increases. The Mises stress peak value increases with the airbag expansion, and the trend is similar to that of the gas pressure. The simulated relationship between the gap and the air pressure can guide the air-pressure control of an airbag during the actual operation of a dry cabin.

JZUS-A