Journal of Zhejiang University-SCIENCE A

A thermal management strategy for hybrid electric drive tracked vehicles considering system safety and energy consumption based on the GMA-TD3-MPC algorithm

Xiao ZHENG, Junliang ZHAO, Yuchao YAN, Zhentao LIU

Cite this as: Xiao ZHENG, Junliang ZHAO, Yuchao YAN, Zhentao LIU, 2026. A thermal management strategy for hybrid electric drive tracked vehicles considering system safety and energy consumption based on the GMA-TD3-MPC algorithm. *Journal of Zhejiang University-SCIENCE A*, 27(8):897910. https://doi.org/10.1631/jzus.A2500493

VEHICLE AND THERMAL MANAGEMENT SYSTEM MODEL

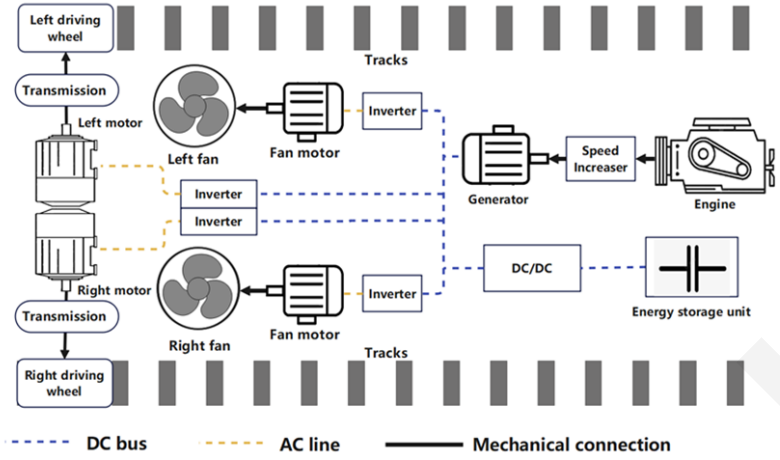

The powertrain composition of HETVs

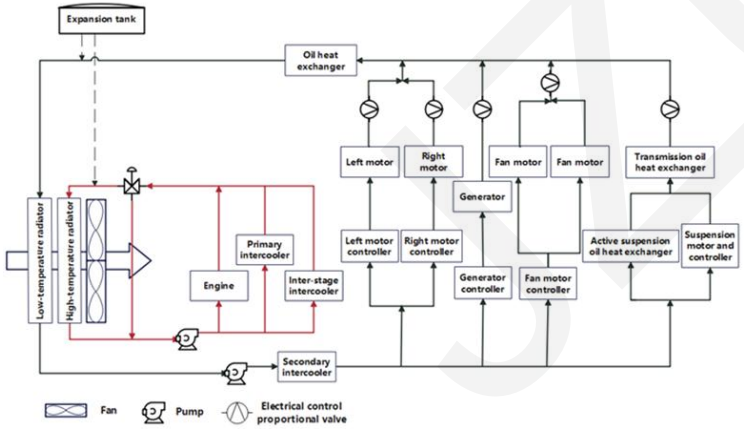

The TMS architecture of the HETVs

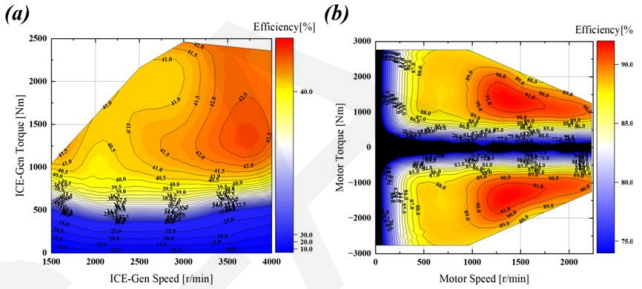

The efficiency maps of the ICE-Generator and drive motors

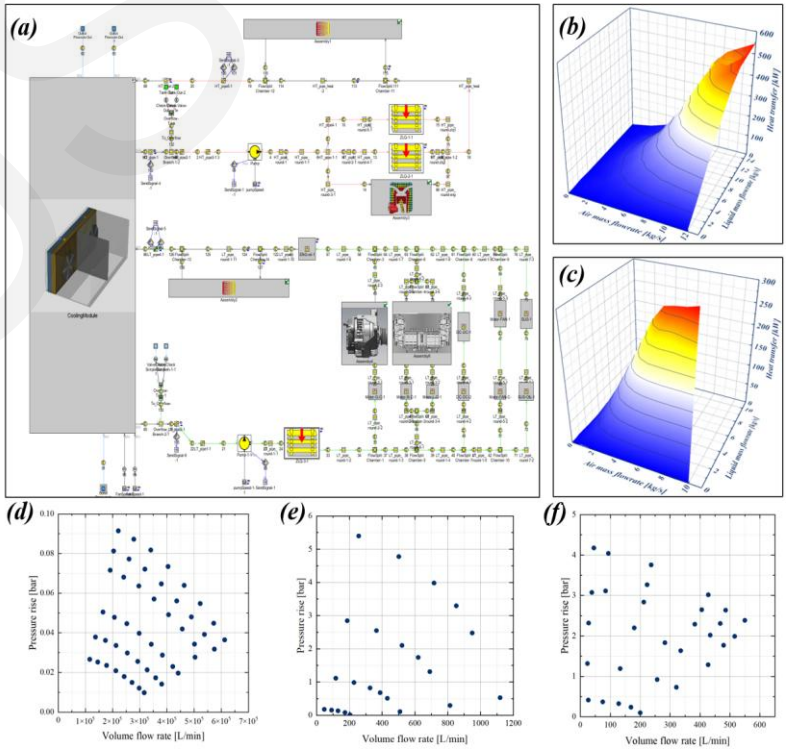

TMS simulation model

SAFETY- AND ENERGY-CONSCIOUS THERMAL MANAGEMENT STRATEGY

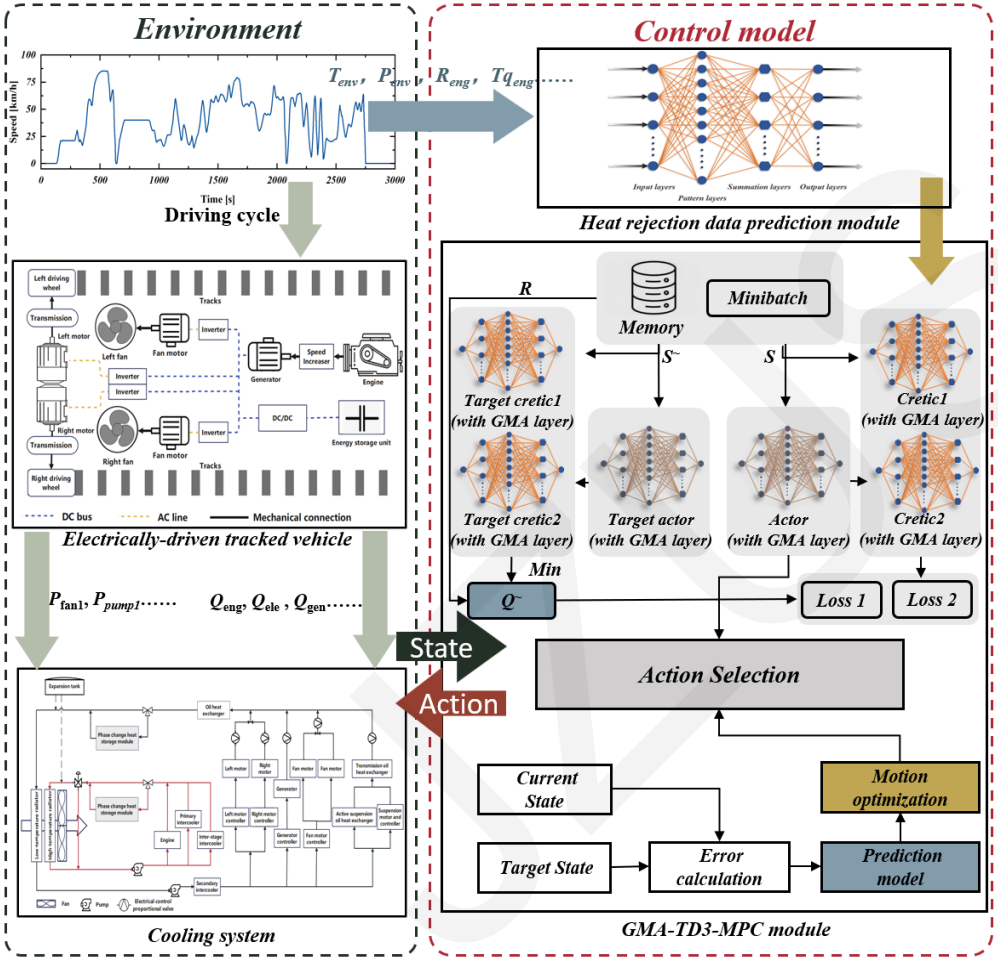

Framework of the control strategy based on GMA-TD3-MPC

- **Environment:** Collect status data of the vehicle power system and external environment to form a decision-making observation space.
- **Heat prediction module:** Heat prediction based on GRNN, sensing the heat flow under sudden changes in the power system.
- **GMA-TD3-MPC algorithm:**
- **Upper layer:** Integrate GRU and MHA multi-head attention mechanisms to adaptively find the path with the lowest energy consumption.
- **Lower layer:** MPC is based on the state space model and provides strong constraint control when approaching the temperature safety boundary to prevent overheating/cooling.
- **Action selection:** Smooth switching mechanism, using temperature deviation as the scheduling variable. When the system deviates from the appropriate range, the MPC weight is increased to prioritize thermal safety; when the temperature is stable, GMA-TD3 is activated to lead energy consumption optimization.

RESULTS AND DISCUSSION

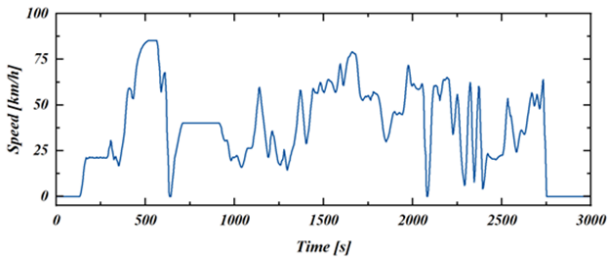

Typical driving cycle for tracked vehicles

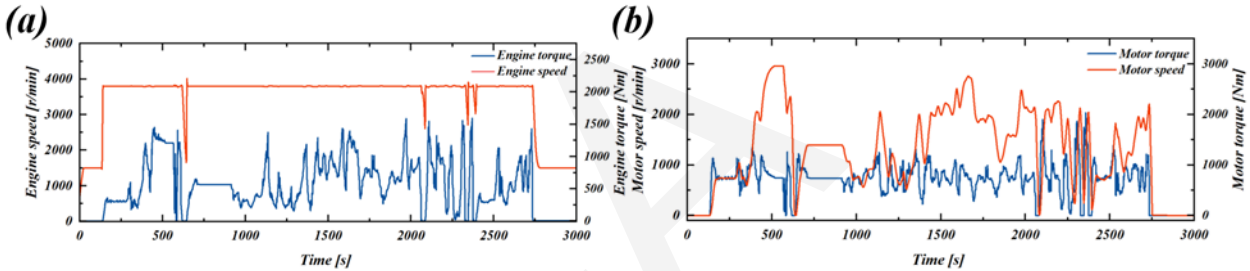

(a) Engine speed and torque variations under driving cycle.
(b) Speed and torque variations of left/right motors under driving cycle

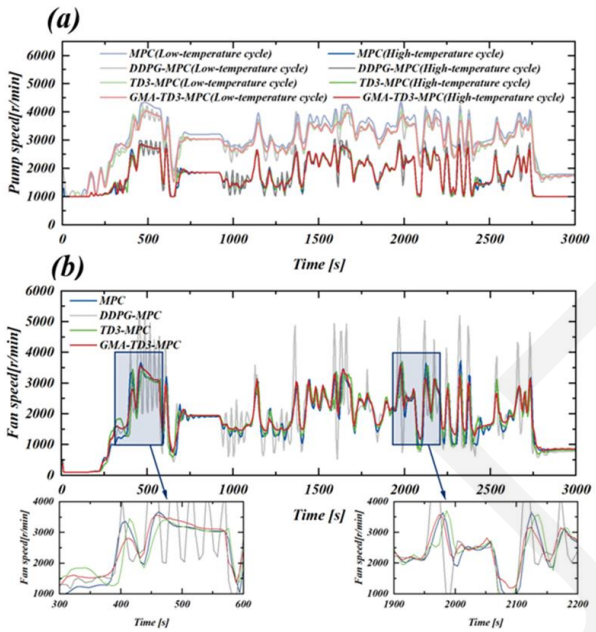

(a) Comparison of high-/low-temperature circuit pump speed variation trends under different control algorithms. (b) Comparison of fan speed variation trends under different control algorithms.

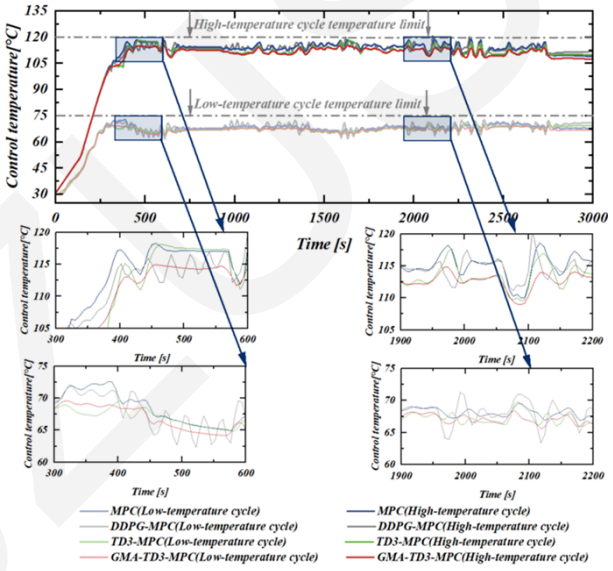

The comparison of controlled temperature results in high-/low-temperature circuits under different control algorithms

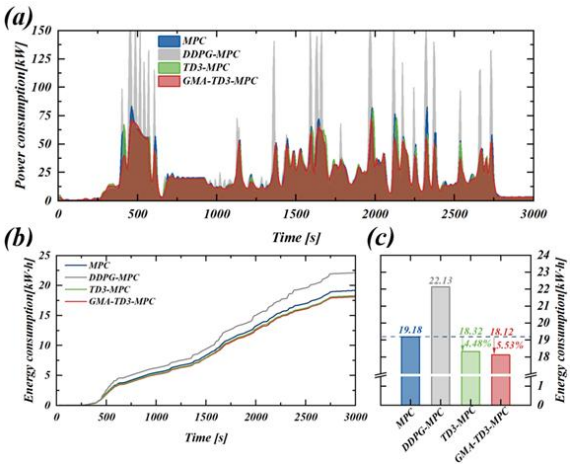

(a) Comparison of power consumption over time among different control algorithms. (b) Comparison of cumulative energy consumption over time among different control algorithms. (c) Energy consumption results across different control algorithms.

Conclusions

- The GMA-TD3 algorithm that introduces the GRU and MHA mechanisms has excellent training convergence, and the convergence speed is approximately 28% and 40% higher than that of DDPG and TD3 respectively;
- After applying the GMA-TD3-MPC adaptive strategy, the temperature control accuracy is significantly improved. Under standard off-road conditions, the temperature fluctuation range of high and low temperature loops is reduced by 44.19% and 6.45% respectively compared with MPC alone, effectively avoiding the risk of system overheating;
- The adaptive control strategy achieves substantial optimization of energy consumption. Under 25° C operating conditions, the total energy consumption is reduced by 5.53% compared with MPC, and the peak power demand is reduced by 10.63%. Under the extreme high temperature operating condition of 45° C, the total energy consumption is significantly reduced by 13.41%, and the overall performance of the thermal management system is significantly improved.