Cite this as: Zhifeng ZHOU, Huang KUANG, Yuexian MA, Ling ZHANG. Application of extracorporeal therapies in critically ill COVID-19 patients[J]. Journal of Zhejiang University Science B, 2021, 22(9): 701-717. http://doi.org/10.1631/jzus.B2100344

Application of extracorporeal therapies in critically ill COVID-19 patients

Key words: COVID-19; Critical illness; Cytokine release syndrome (CRS); Acute kidney injury (AKI); Extracorporeal therapies

Research Summary

- **This review mainly focused on the application of extracorporeal therapies such as continuous renal replacement therapy (CRRT), therapeutic plasma exchange (TPE), hemoadsorption (HA), extracorporeal membrane oxygenation (ECMO) and extracorporeal carbon dioxide removal (ECCO2R) in critically ill COVID-19 patients**

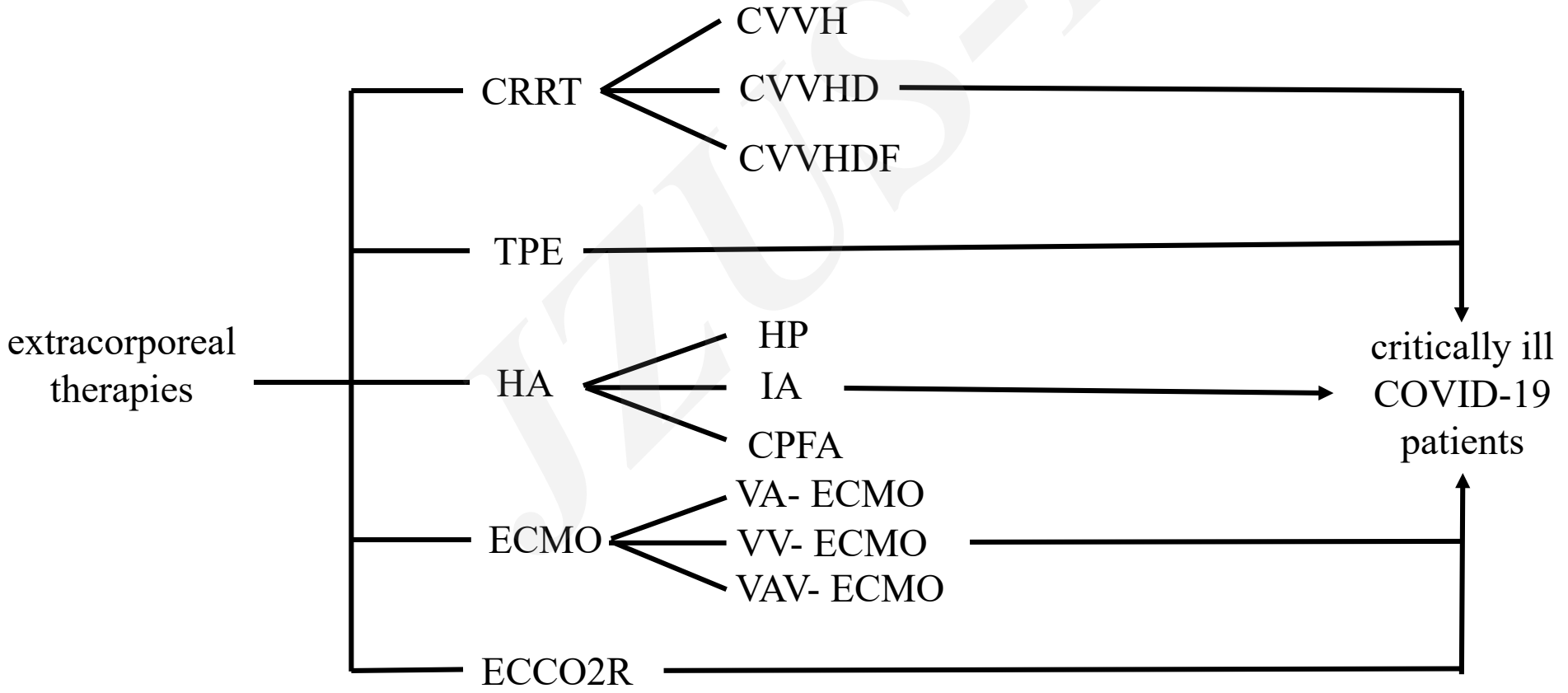

Innovation points

- **Introduction** **of the application of five main extracorporeal therapies in critically ill COVID-19 patients.**
- **Summary** **of the modality options of extracorporeal therapies for critically ill COVID-19 patients and the advantages and limitations of these extracorporeal therapies.**
- **List** **of some representative clinical studies to better explain the role of extracorporeal therapies in treating these critically ill patients**

JZUSCB

Innovation points

Figure 1 | Modality options of extracorporeal purification therapies for critically ill COVID-19 patients

Table 1 | Outcomes of the application of extracorporeal therapies in critically ill COVID-19 patients.

Table 2 | Advantages and limitations of some extracorporeal therapies in treating critically ill COVID-19 patients.

JZUSB