Jian-guang Shi, De-jun Li, Can-jun Yang, 2013. Design and analysis of an underwater inductive coupling power transfer system for autonomous underwater vehicle docking applications. *Journal of Zhejiang University-SCIENCE C (Computers & Electronics)*, **15**(1):51-62. [doi:10.1631/jzus.C1300171]

Design and analysis of an underwater inductive coupling power transfer system for autonomous underwater vehicle docking applications

用于AUV接驳系统的水下感应式电能传输系统的设计与分析

JZUS C (Comput & Electron)

Key words: Inductive coupling power transfer (ICPT), Autonomous underwater vehicle (AUV) docking, Coupling coefficient, Resonant capacitance, Power transfer efficiency, Power loss, Eddy current

关键词：感应式电能传输，AUV接驳系统电能传输，感应式电能传输，耦合系数，谐振电容，效率，损耗，涡流

Objectives of this study

- Design an inductive power transfer system specifically for AUV docking applications
- Evaluate the performance of the system through theoretical analysis
- Determine the effect of all the parameters to the performance of the system for further improvement
- Verify the availability of the system and analysis results through experiments

JZNSC (Comput & Electron)

Circuit design

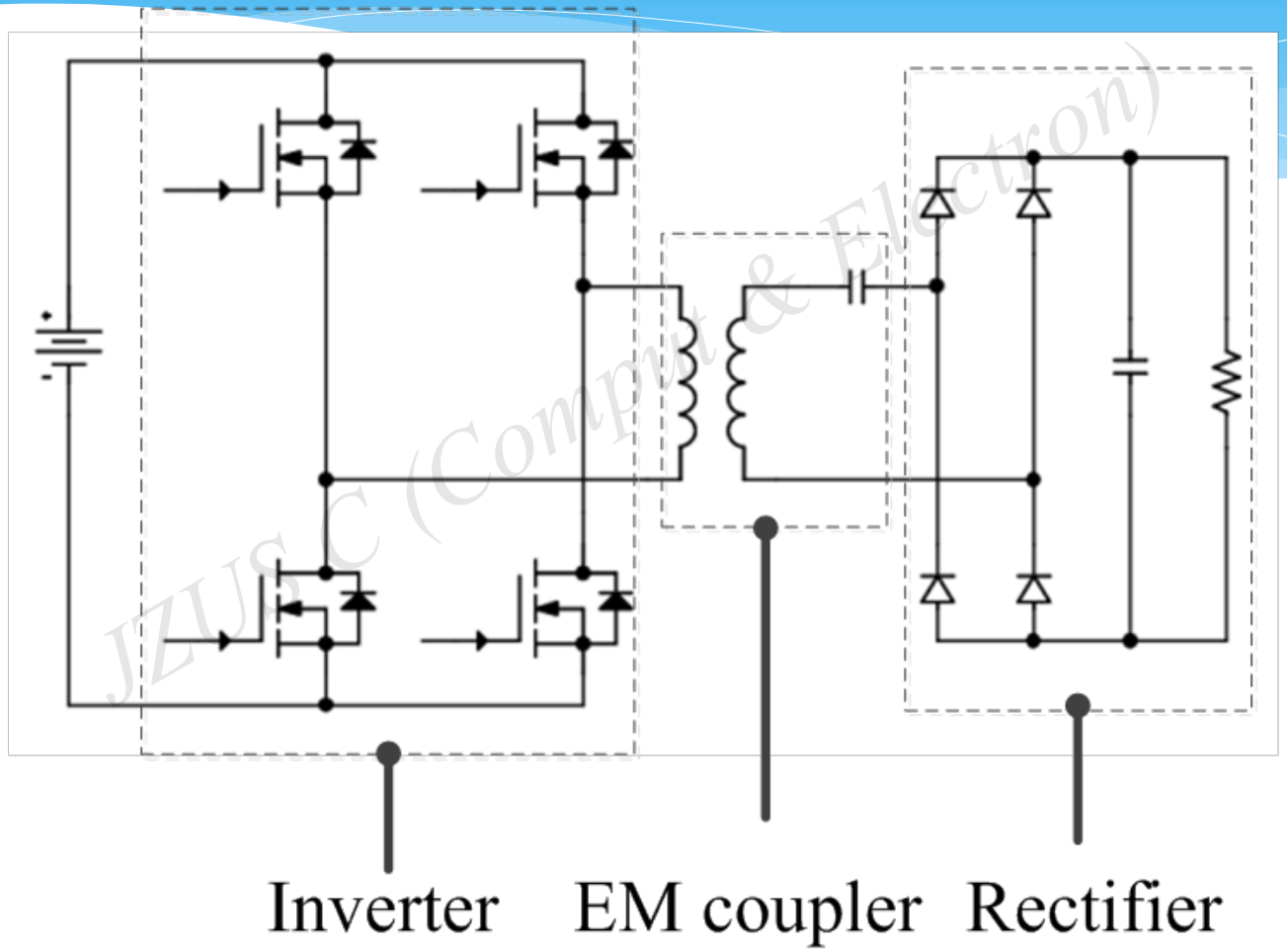

JZUSC (Comput & Electron)

Resonant state analysis

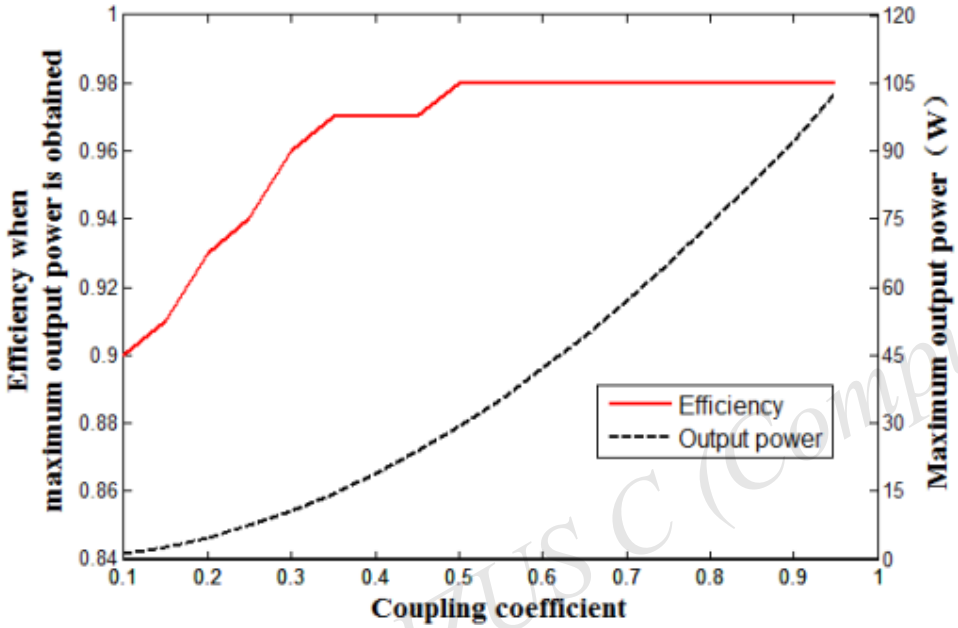

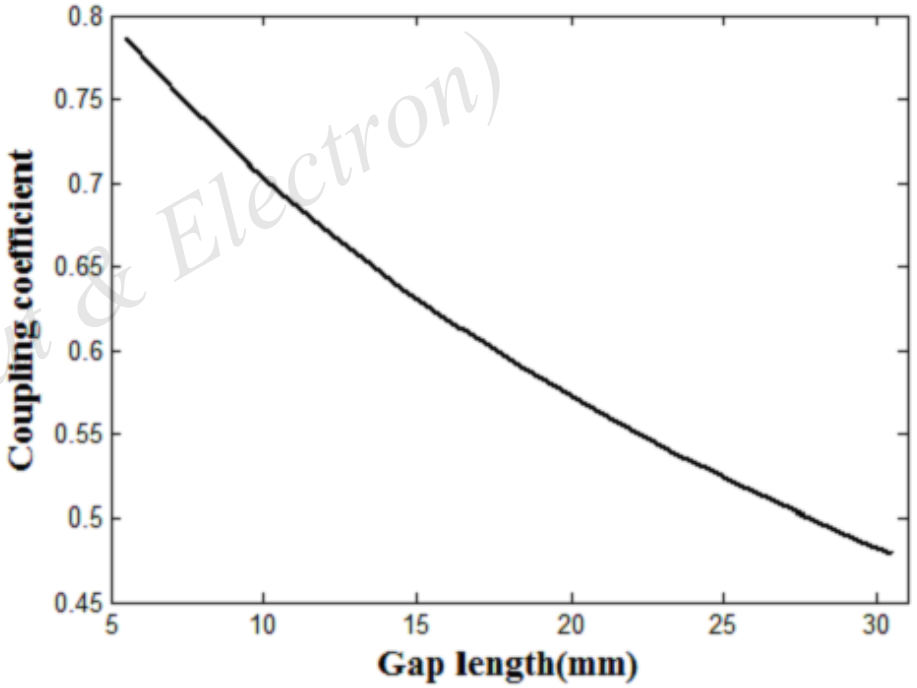

JZUS C (Comput. & Electron)

Maximum output: the out power when a nearly resonant state is reached by adjusting the resonant capacitance

Obtained by FEA using ANSOFT MAXWELL

The coupling coefficient has little impact on the efficiency!

Loss analysis: copper loss

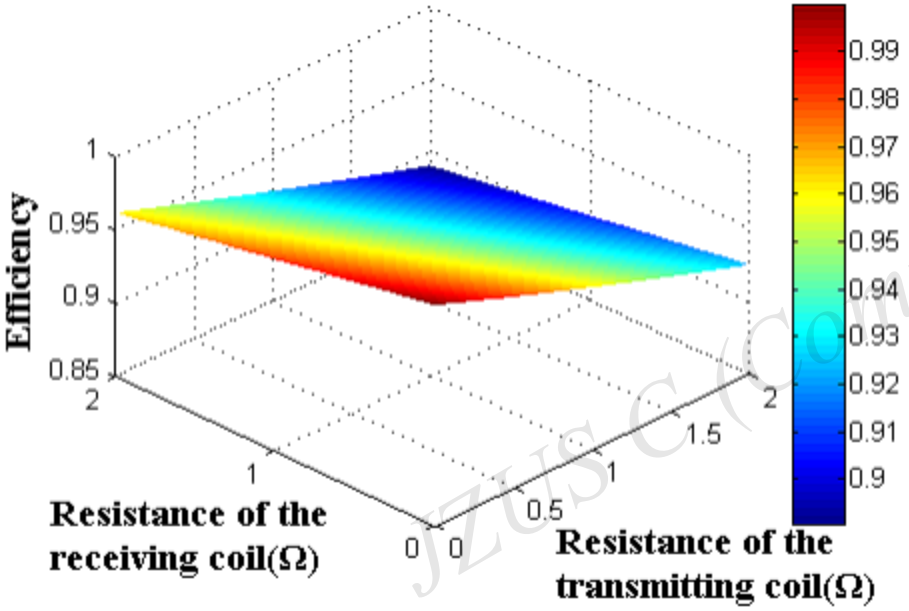

Fig.8 Influence of the AC resistances of coils on efficiency

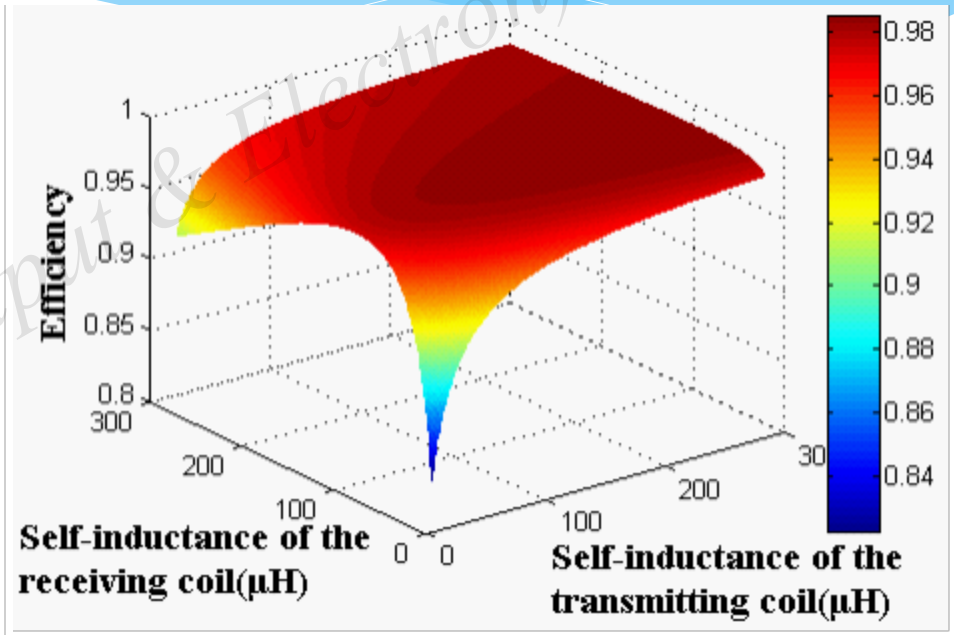

Fig.9 Influence of the self-inductances of coils on efficiency

JZUSC (Comput & Electron)

Loss analysis: semiconductor loss

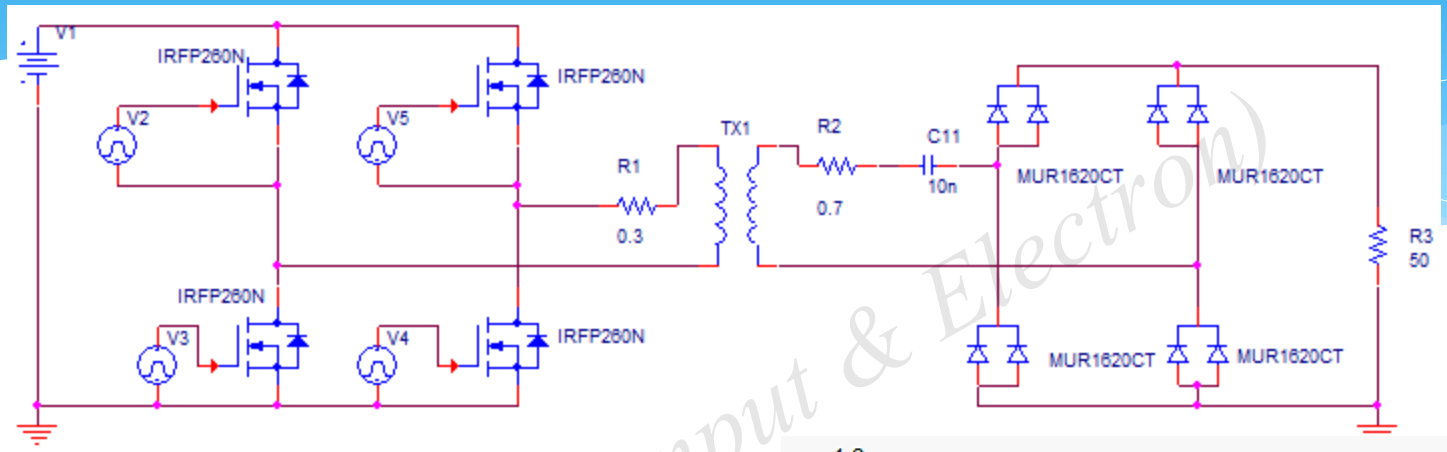

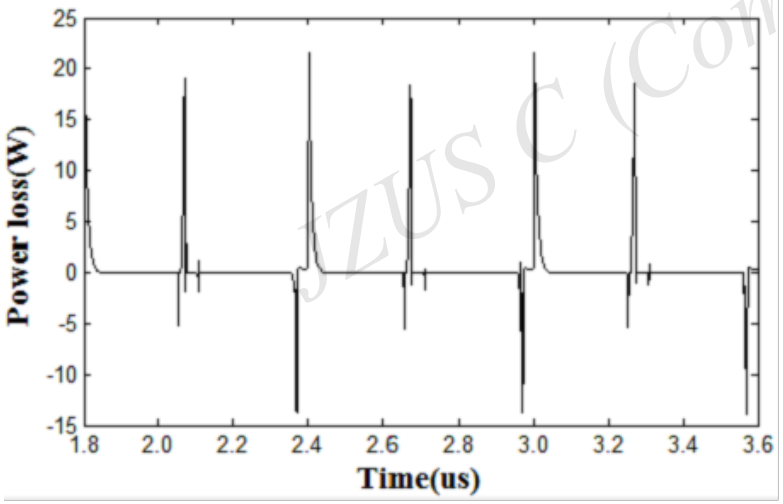

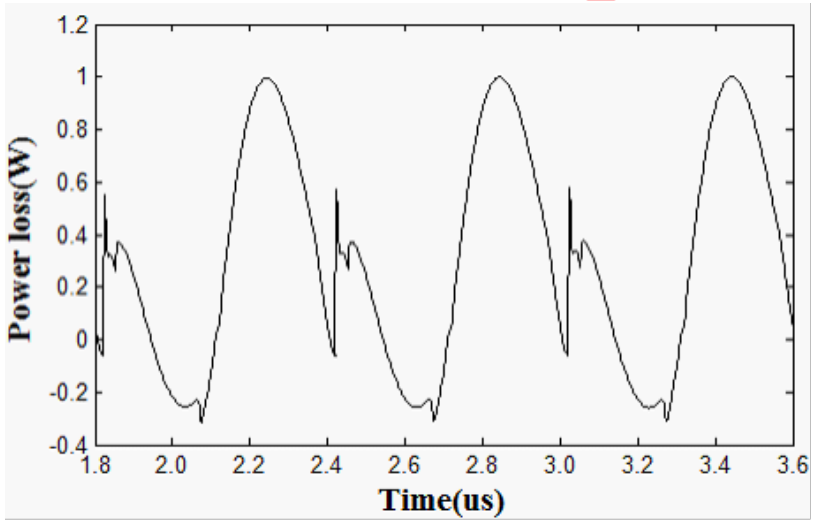

Power loss in a MOSFET (0.3 W in average)

Power loss in a diode (0.4 W in average)

P_{out}=43.5 W

JZUS C (Comput & Electron)

Loss analysis: eddy current loss

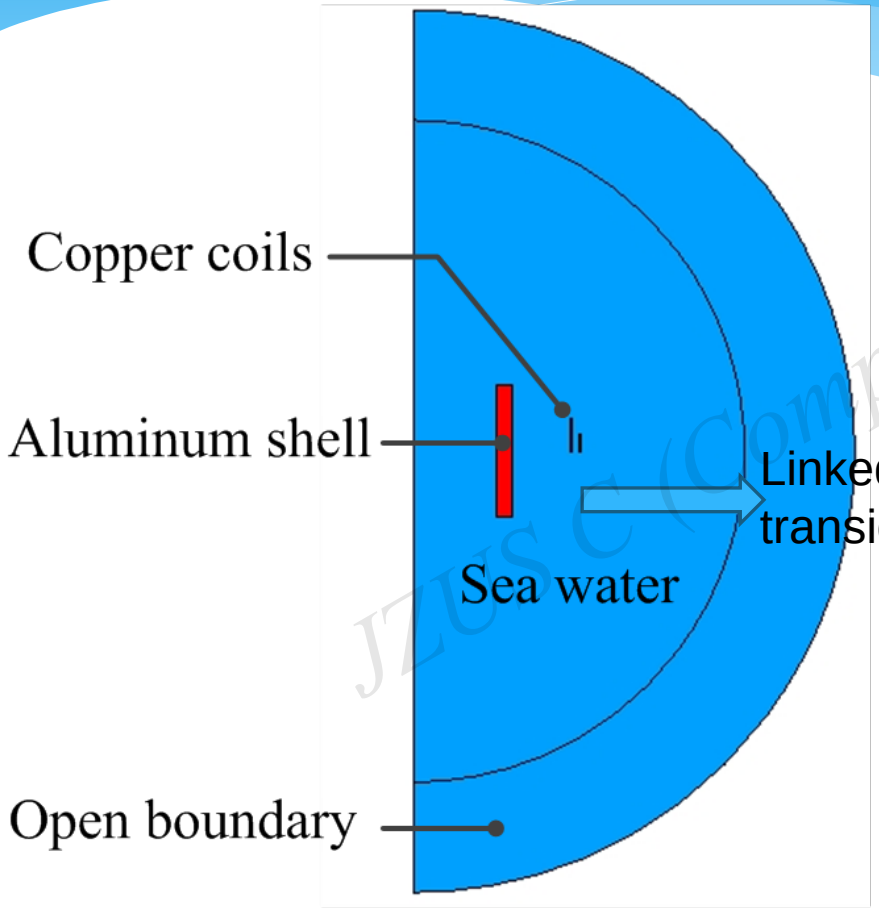

FEA model

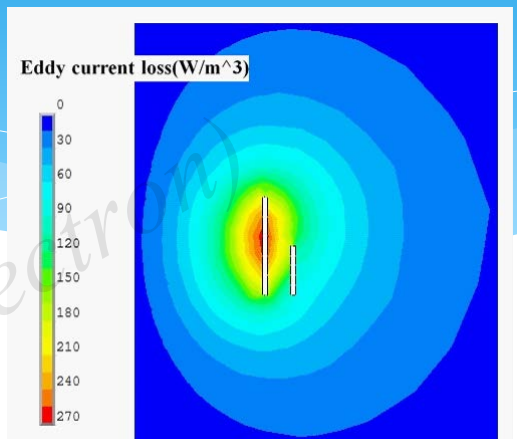

Power loss in sea water (0.34 W in average)

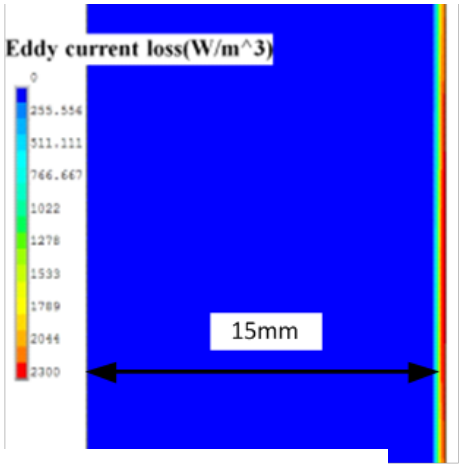

Power loss in aluminum shell (0.03 W in average)

P_{out}=43.5 W

JZUS C (Comput & Electron)

Loss analysis: high power situation

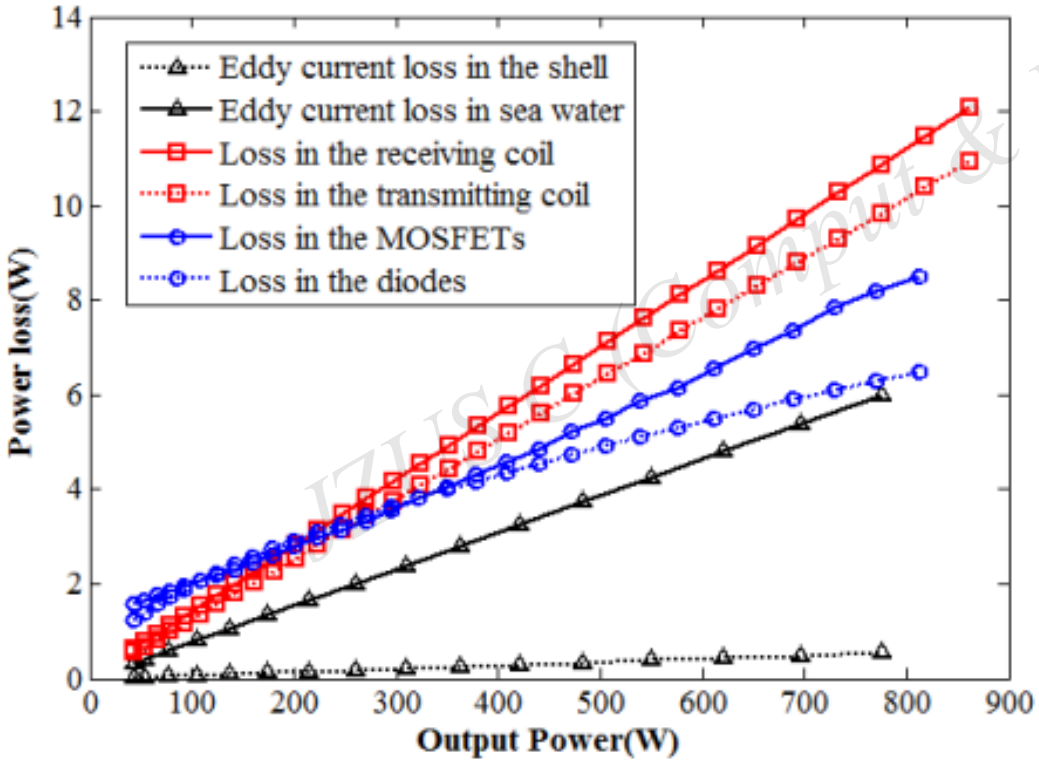

Copper loss and semiconductor loss are obtained through circuit simulation and eddy current loss is obtained through FEA

JZUS-C (Comput & Electron)

Conclusions

- The output power of the prototype system is up to 45 W and the efficiency is up to 0.84.
- The preliminary results indicate that the efficiency will increase as the transmission power is raised by increasing the input voltage. When the output power reaches 500 W, the efficiency is expected to exceed 0.94. The efficiency can be further improved by choosing proper semiconductors and coils.

IEEE C (Comput. & Electron)